Pivot PRO105 Pre-Production Information Sheet

The PIVOT PC-PRO105 case you have been issued for review and testing is a fully functional, pre-production sample is known as a “First Shot” round of product created after molds have been milled. Our development process is efficient and you will find that the case you are using is very close to being ready for production with the exception of a few items which will be addressed.

In order to reduce any opportunity for confusion by reviewers/testers, we find it is best to make you aware of the primary remaining issues prior to full scale production.

These are things to be aware of when evaluating this sample.

1. Texture has not been added to the Polycarbonate body. PC retains a shiny appearance and clearly shows mill marks, scratches and other cosmetic issues. Once the other adjustments to the molds are complete, a texturing process will be performed on the mold and these visible flaws will be removed.
2. Texture has not been added to the TPU (rubber) insert. Resultant effect is the smooth walls of the TPU insert grip the iPad more firmly than the textured finish. You will notice this when removing your device at the end of your test period. Texturing will make removal easier while retaining full drop protection.
    a. If you are a previous user of the PC-PRO97 case, the device fit was too firm. The goal is to find the exact combination of user comfort, and adequate protection of company assets.
3. The Removable SmartEdge will have improved reliability on the center connection slots. Currently they do not engage in a completely reliable manner. Minor post height dimensional update will improve the connection to the necessary standard.
4. The ID privacy window has been installed using a traditional, hand applied glue which may fail if stressed excessively. Production units will be adhered using full ultrasonic welding and will not fail.
5. Additional folio improvement includes additional creases in the folio arm to eradicate device bounce when viewing using the folio viewing stand. This is a minor modification to the mold and the production model will have little to no bounce while typing or other screen inputs.

Closing:

The PC-PRO105 case will see further refinements to the design in the final round of adjustments, however the material content will not change. Performance of the case for device protection, cockpit mounting and generalized operational use will not change from this sample. Please take a moment to download the PDF we created for you to review. An Evolutionary Change Guide and PRO 10.5” User Guide may be found at this link and will support your knowledge of this exciting new product.

LINK:

If you have any comments regarding your testing or have questions on best practices in or outside of the cockpit with your PIVOT product, please don’t hesitate to contact us directly and provide your insight. It’s very valuable to have direct communication with the end users out on the line. Email me at mike@flyboys.com / SUBJ: PIVOT TEST FEEDBACK

Thank you,

// signed //

Mike Schulter – Director of Business Development
PIVOT – www.pivotcase.com

PIVOT™

PRO 105 & OMNI 97

Evolutionary Features Briefing

Concept Briefing. For internal or special release user reference only. Proprietary and confidential.

Introduction

The Latest Additions To The PIVOT Family

INTRODUCING…

PIVOT PRO 105

iPad Pro 10.5”

PIVOT OMNI 97

NEW iPad 9.7”, iPad Pro 9.7” & iPad Air 2

Concept Briefing. For internal or special release user reference only. Proprietary and confidential.

Introduction

Overview – New PRO Model

PIVOT PRO 105

Device Compatibility - The new PIVOT PRO 105 is specifically designed to fit the latest addition to the Apple iPad Family, the iPad PRO 10.5”

All of the port / button access, camera openings and other features align directly with the corresponding iPad features.

iPad Pro 10.5”

Concept Briefing. For internal or special release user reference only. Proprietary and confidential.

Introduction

Overview – New OMNI Model

iPad 9.7”

Air 2

iPad Pro 9.7”

PIVOT OMNI 97

Device Compatibility - The new PIVOT OMNI 97 is designed to be a multigenerational solution. With the use of the PIVOT Universal Spacer, the OMNI 97 fits the new Apple iPad 9.7”, iPad Pro 9.7” and the Air 2. Features such as camera / audio jack openings and button access have been shifted to accommodate the various locations of these features across the different devices.

Concept Briefing. For internal or special release user reference only. Proprietary and confidential.

Introduction

Overview – New OMNI Model

PIVOT OMNI 97

Device Compatibility - The new PIVOT OMNI 97 includes the Universal Spacer insert. Use the insert in the following device configurations:

Use Universal Spacer:

iPad Pro 9.7”
iPad Air 2

Remove Universal Spacer:

iPad 9.7”

The Universal Spacer fits perfectly into place to fill the difference between device dimensions – while all three devices retain full button functionality and operation.

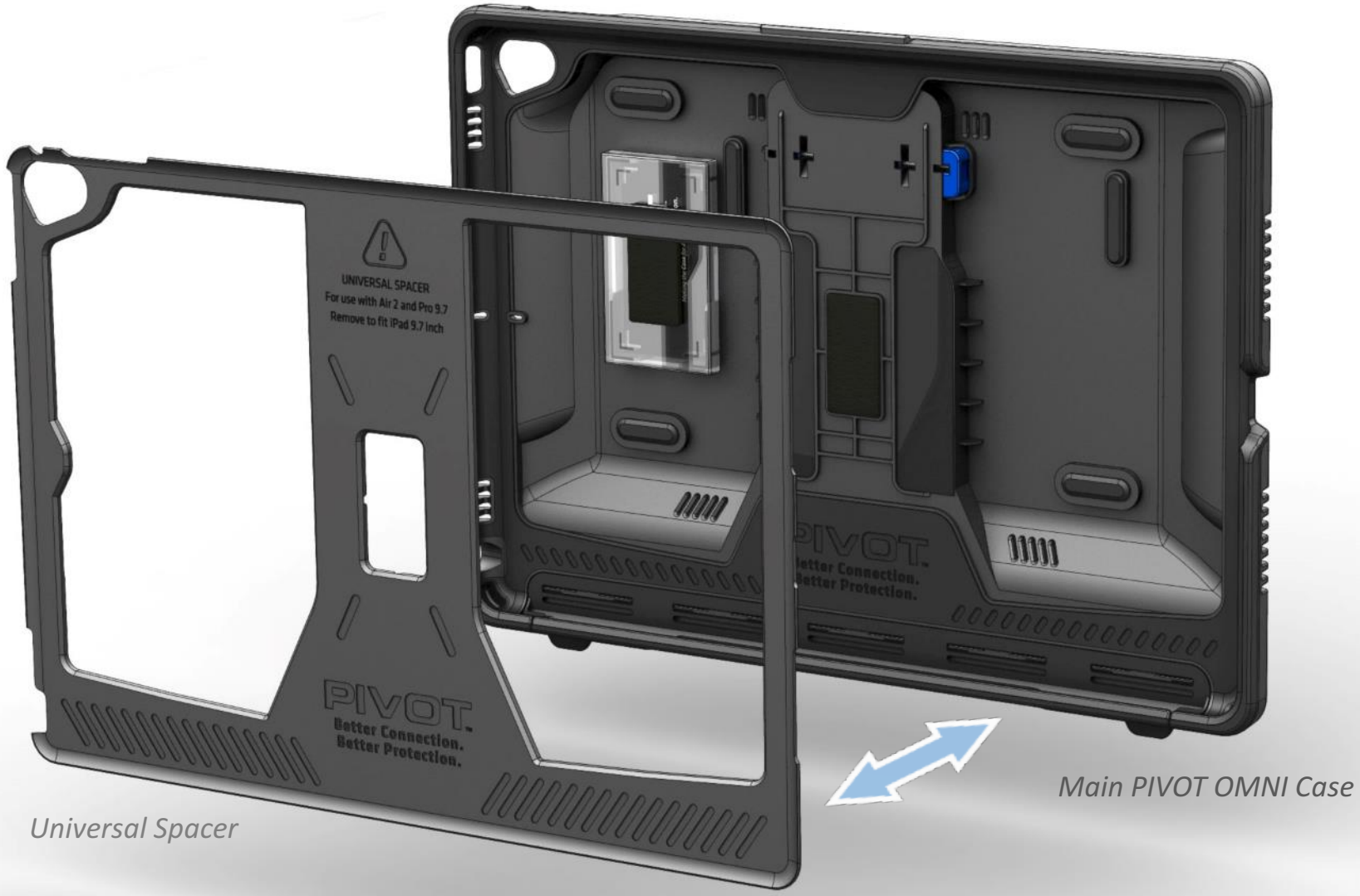

Universal Spacer

Main PIVOT OMNI Case

Concept Briefing. For internal or special release user reference only. Proprietary and confidential.

SUMMARY: Evolutionary Features

CASE IMPROVEMENTS

1. **Ingress & Egress Improvements** – The Polycarbonate and TPU front frame has been redesigned to increase flexion. Combined with fine-tuning the TPU overhang, this will make installing and removing the device much quicker and easier.
2. **Reinforced Structure** – Structural ribs added to back of the PIVOT Mounting Channel improve rigidity to further reduce case-flex and vibration potential.
3. **Accessory Strap Slots** – Two slots have been added for the optional use of accessories such as *hand or *shoulder straps. *(*coming soon)*
4. **Rounded Case Feet** – The design of the rubber feet has been revised to make them very difficult to remove by accidental force. The rounded shape leaves no edge exposed to catch on the interior of bags or other surfaces.
5. **Improved Tolerances** – The precision tolerances of the original PRO 97 design have been further improved upon to refine many aspects of the fit and user interaction experience.
6. **Optimization** – General mold flow and material optimization improvements further increase the quality of all the PIVOT case components.
7. *Mounting Channel Covers – Lamination surface is much bigger, for better adhesion of the PET Covers *(*PRO 105 only)*
8. *20% Increase in thermal control vent size for increase airflow *(*PRO 105 only)*
9. *35% increase in speaker outlet opening for improved sound quality. *(*PRO 105 only)*

Concept Briefing. For internal or special release user reference only. Proprietary and confidential.

SUMMARY: Evolutionary Features

FOLIO COVER IMPROVEMENTS

1. **New Magnet Cover Design** – The previous magnet cover design has been discontinued. A new, extremely robust snap-in cover has been designed to prevent damage from misuse of the folio cover. Now, if a user bends the folio cover backwards, the force will drive the cover into the kickstand, eliminating the potential for damaging the magnet cover.
2. **Improved Kickstand Design** – 50% Thicker for improved strength. Formally vulnerable areas have been identified and redesigned. PC + TPU Over-mold bonding increased by 250% surface area for superior connection, to eliminate delamination potential.
3. **Anti-Bounce Crease** – This special crease in the TPU, at the base of the kickstand folds neatly to reduce the folio cover's tendency to arch and bounce slightly when the user is typing vigorously.
4. **Increased Durability** – 30% Thicker front folio to further improve drop protection in 'Transit Mode', but with only 0.65mm increase in the total case thickness. There is also an approximately 185% increase in PC + TPU bonding surface area on the front folio cover.
5. **Improved Stability** – The viewing slots in the Folio Cover and the Viewing Feet on the Smart Edge have a greater depth of engagement when in the viewing mode. The PRO 105 also features *colored highlights on the viewing slots to help with user orientation. *(*PRO 105 only)*
6. **Stronger Surface Grip** – The front TPU perimeter has been extended to maximize contact area with table-top surfaces when the folio is used in viewing mode. This larger grip surface improves stability and decreases sliding potential.

Concept Briefing. For internal or special release user reference only. Proprietary and confidential.

Case Improvements

01 – Ingress and Egress

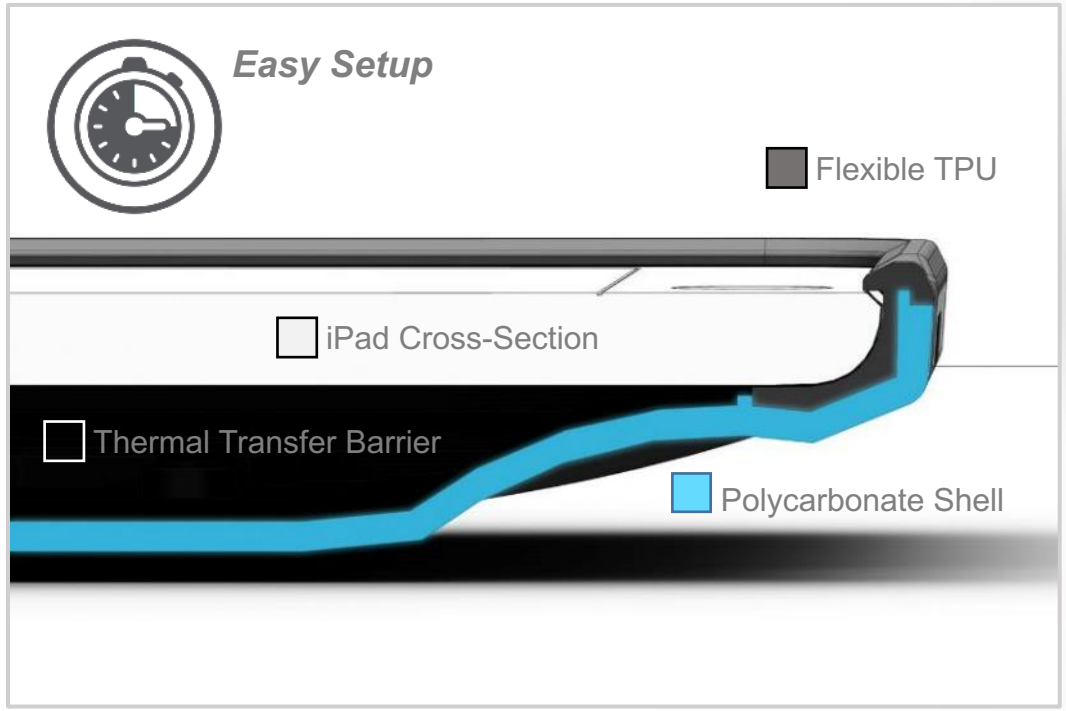

Easy Setup - The Polycarbonate Shell and Flexible TPU front frame have been redesigned to fine tune the device ingress and egress process. Users will discover setup to be much quicker and easier as the device is both installed and removed more easily.

Why? - PIVOT took feedback from the initial PRO 97 deployment and applied it to the design of the new products in order to improve the user experience.

Concept Briefing. For internal or special release user reference only. Proprietary and confidential.

Case Improvements

02 – Reinforced Structure

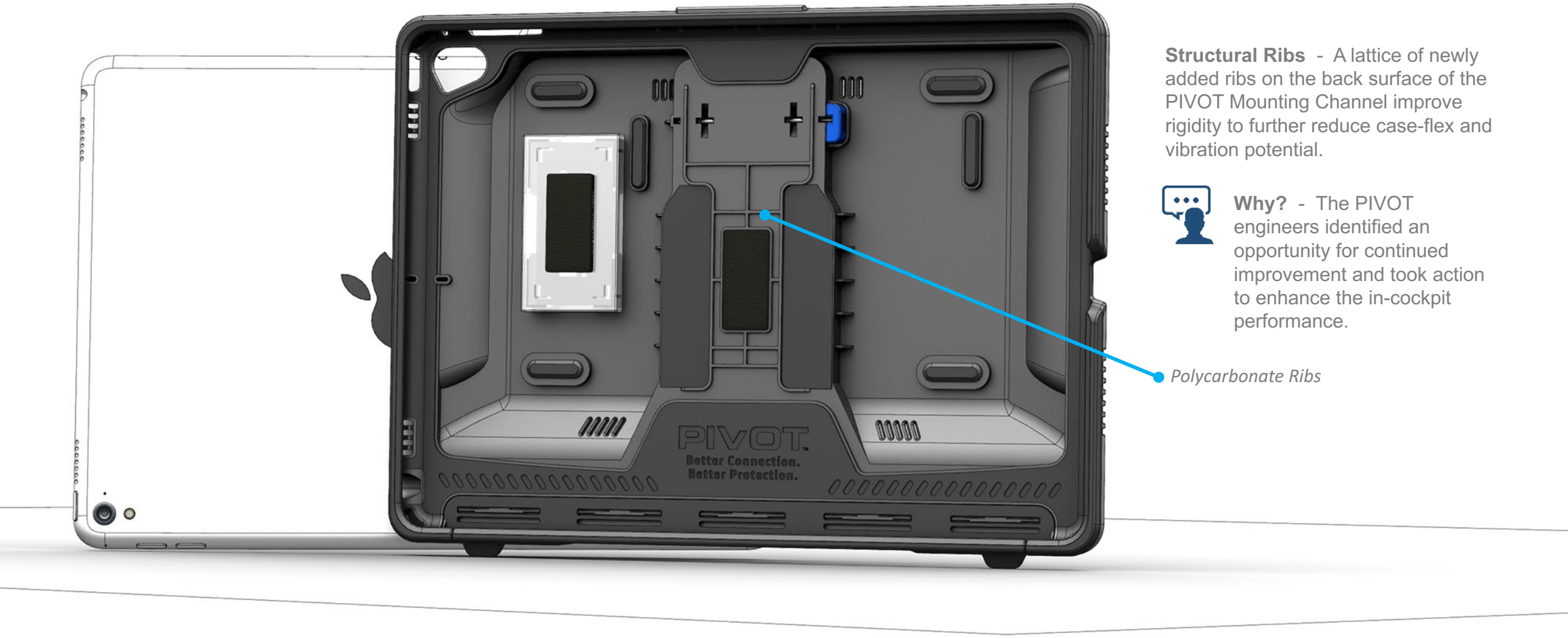

Structural Ribs - A lattice of newly added ribs on the back surface of the PIVOT Mounting Channel improve rigidity to further reduce case-flex and vibration potential.

Why? - The PIVOT engineers identified an opportunity for continued improvement and took action to enhance the in-cockpit performance.

Concept Briefing. For internal or special release user reference only. Proprietary and confidential.

Case Improvements

03 – Accessory Strap Slots

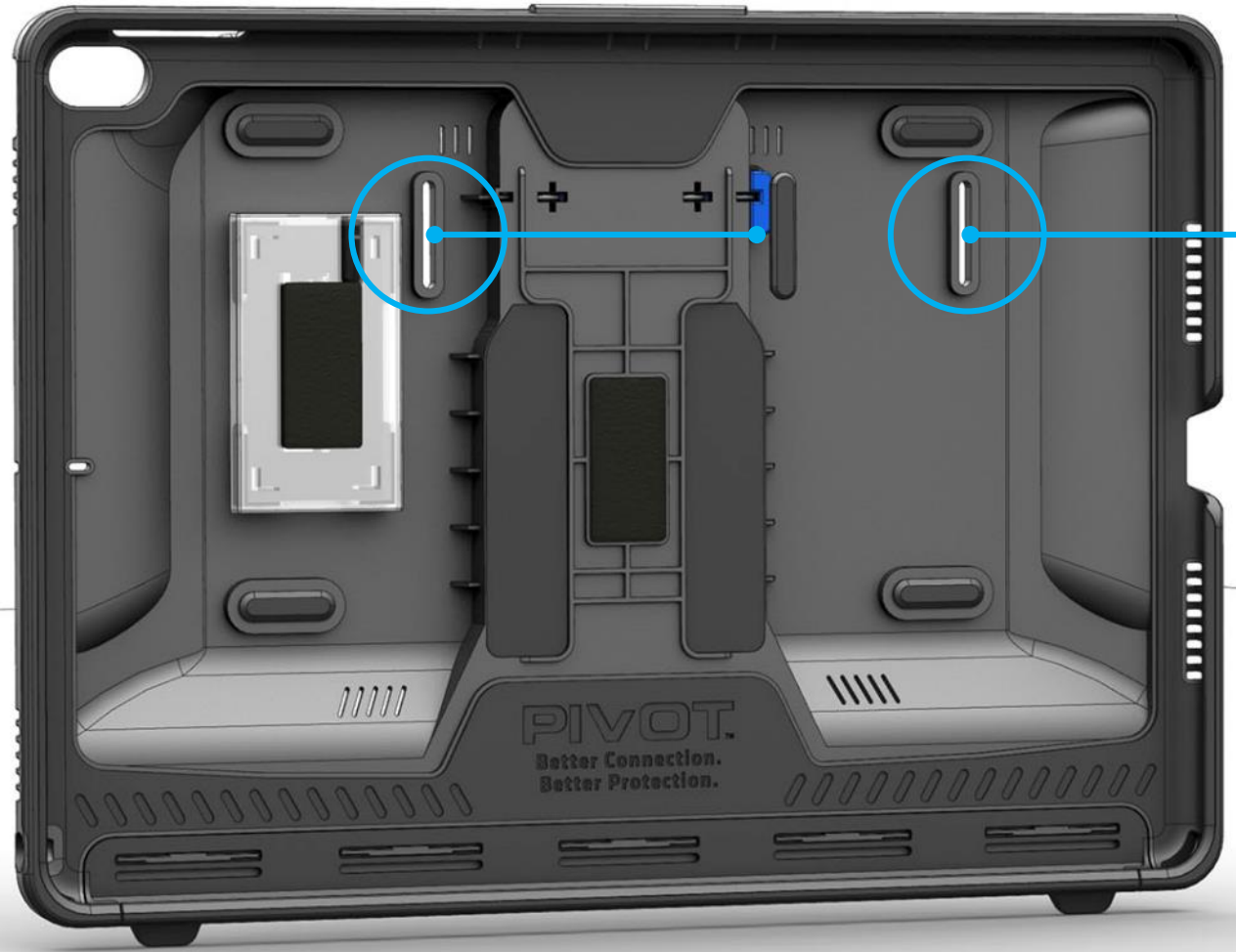

Rubber Plugs - Simply remove the rubber plugs to open the accessory slots. Store the plugs in the I.D. Window cover when not in use.

Accessory Slots - Two slots have been added for the optional use of accessories such as *hand or *shoulder straps. *(*coming soon)*

Why? - PIVOT cases are being deployed by other workgroups requiring similar function and protection. New accessories will be designed on a use-profile basis and will attach to the case at these points.

Concept Briefing. For internal or special release user reference only. Proprietary and confidential.

Case Improvements

04 – Rounded Case Feet

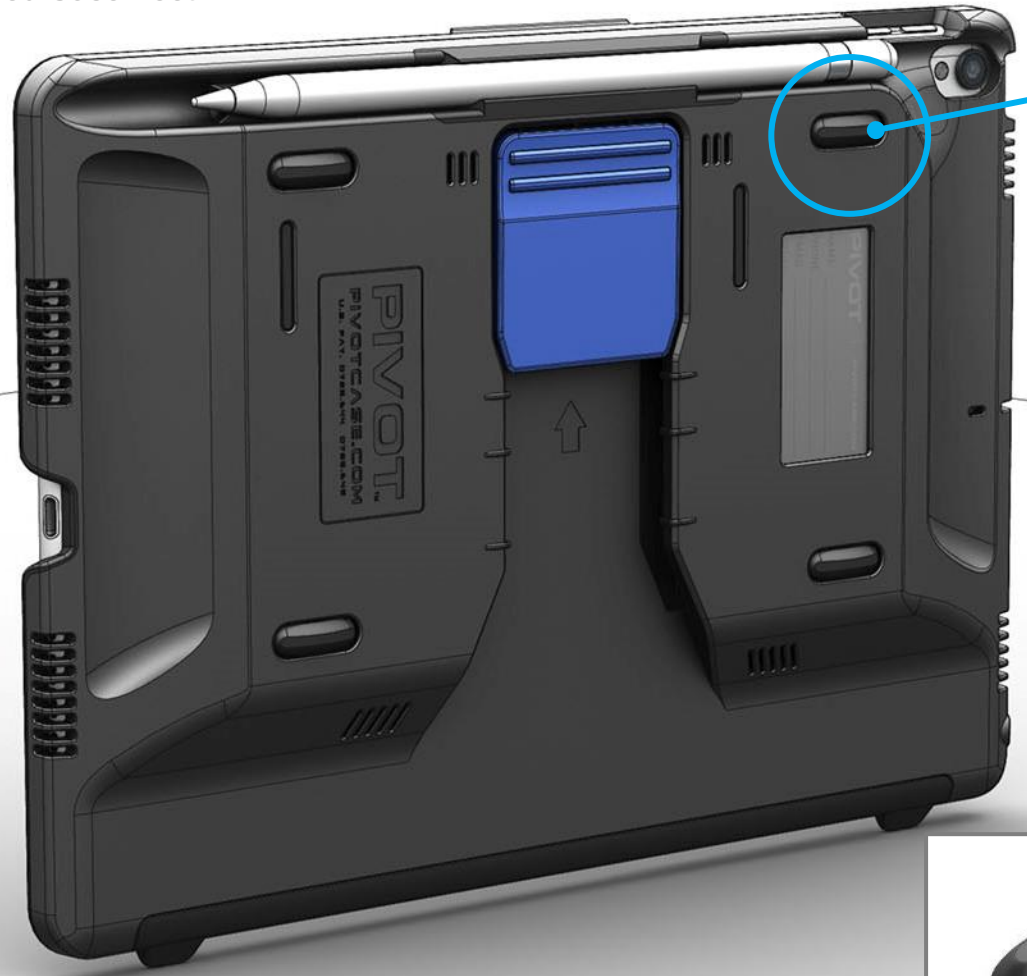

Rubber Feet - The non-slip rubber feet have been revised to make them very difficult to remove by accidental force. The rounded shape leaves no edge exposed to catch on the interior of bags or other surfaces.

Why? - The original shape and angled profile sometimes led to the rubber feet being caught on edges, pulled out of the anchor points and lost. These redesigned feet are very robust, low profile and virtually impossible to accidently remove.

Rounded Shape

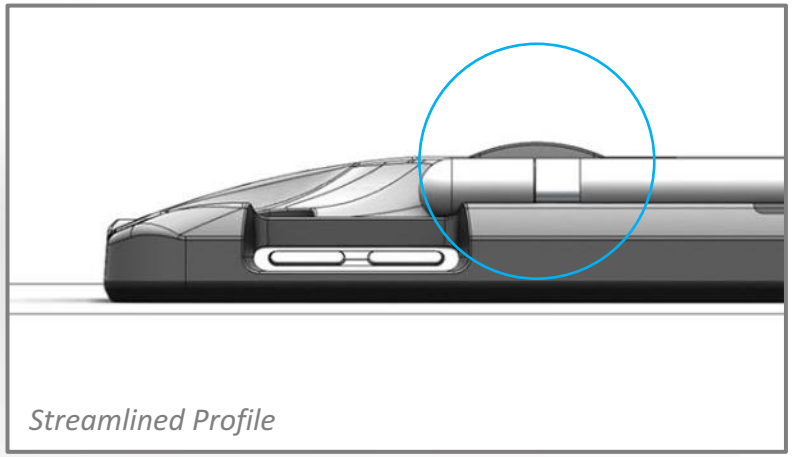

Streamlined Profile

Concept Briefing. For internal or special release user reference only. Proprietary and confidential.

Case Improvements

05 - 07 – Additional Refinements & Feature Enhancements

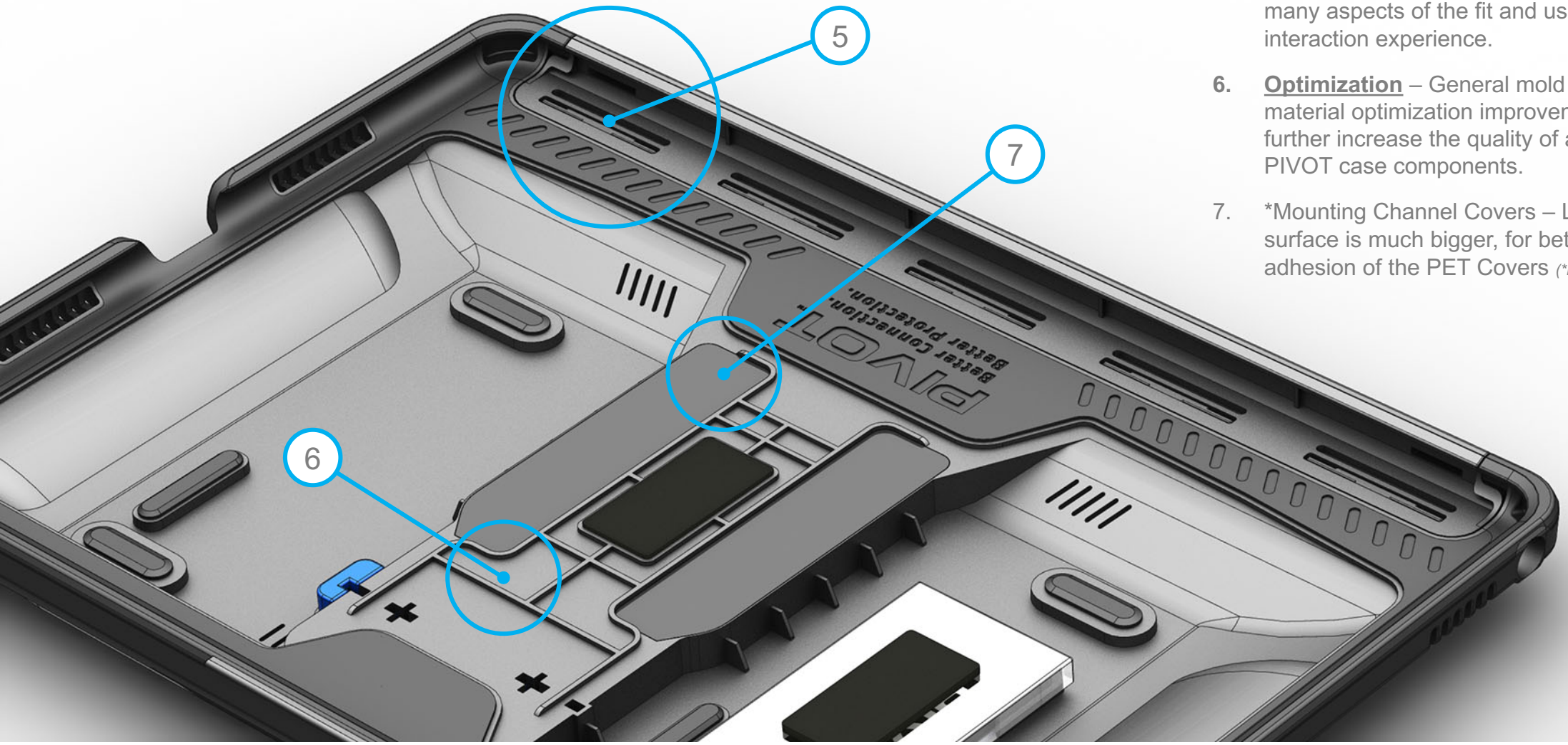

5. **Improved Tolerances** – The precision tolerances of the original PRO 97 design have been further improved upon to refine many aspects of the fit and user interaction experience.

6. **Optimization** – General mold flow and material optimization improvements further increase the quality of all the PIVOT case components.

7. *Mounting Channel Covers – Lamination surface is much bigger, for better adhesion of the PET Covers *(*PRO 105 only)*

Concept Briefing. For internal or special release user reference only. Proprietary and confidential.

Case Improvements

08 - 09 – Additional Feature Enhancements

08. Speaker Outlets – PIVOT PRO 105 design includes a *35% increase in speaker outlet opening for improved sound quality. *(*PRO 105 only)*

09. Thermal Control – Air circulation and venting Keeps the tablet cool by using a chimney effect to pull cooler air in while warmer air is vented. The PRO 105 features a *20% Increase in thermal control vent size for increased airflow *(*PRO 105 only)*

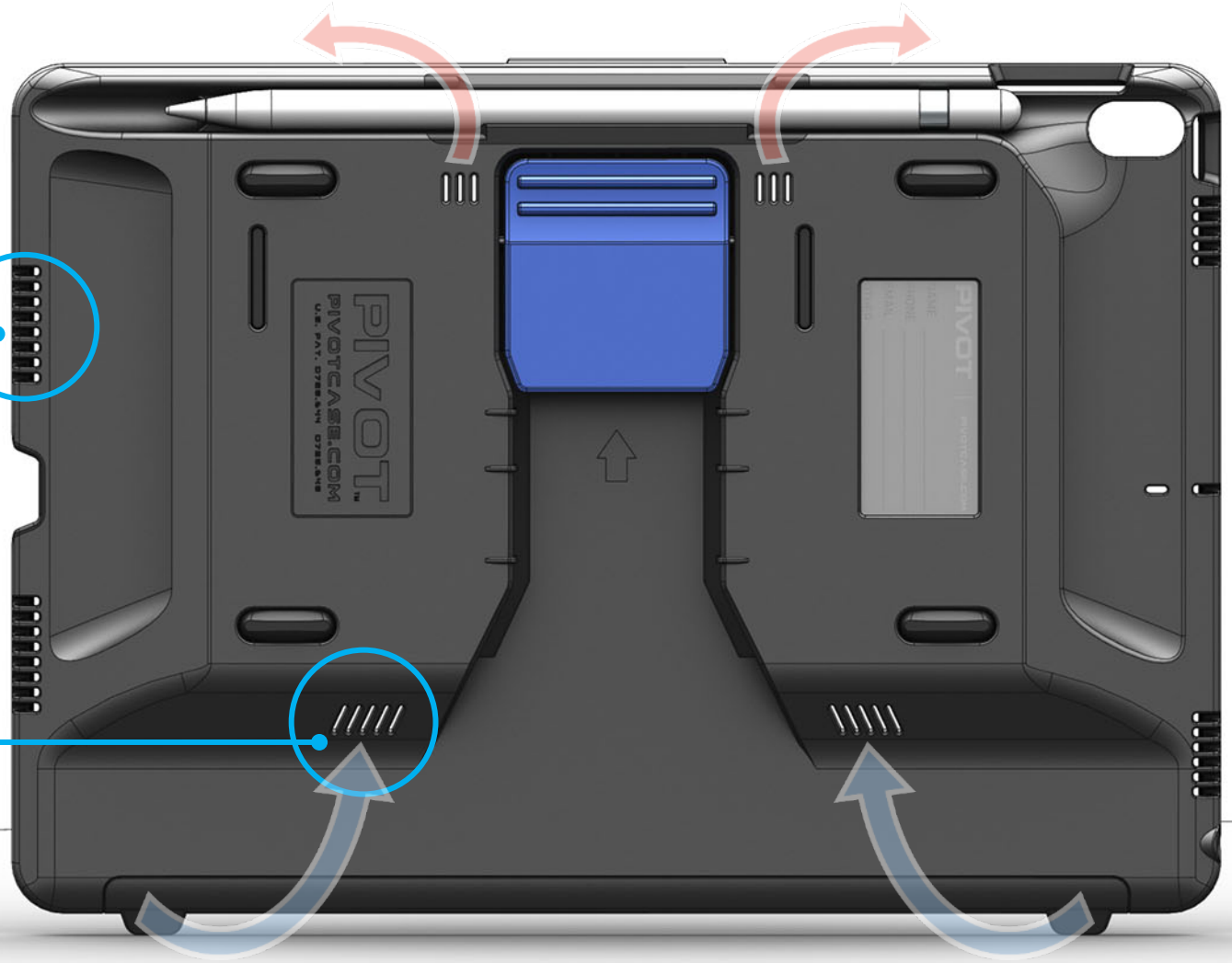

Concept Briefing. For internal or special release user reference only. Proprietary and confidential.

Folio Cover Improvements

01 – New Magnet Cover Design

Magnet Cover - A new, extremely robust snap-in cover has been designed to prevent damage from misuse of the folio cover. Now, if a user bends the folio cover backwards, the force will drive the cover into the kickstand, eliminating the potential for damaging the magnet cover.

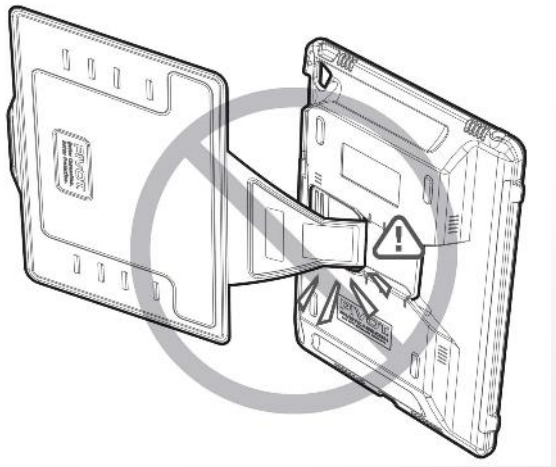

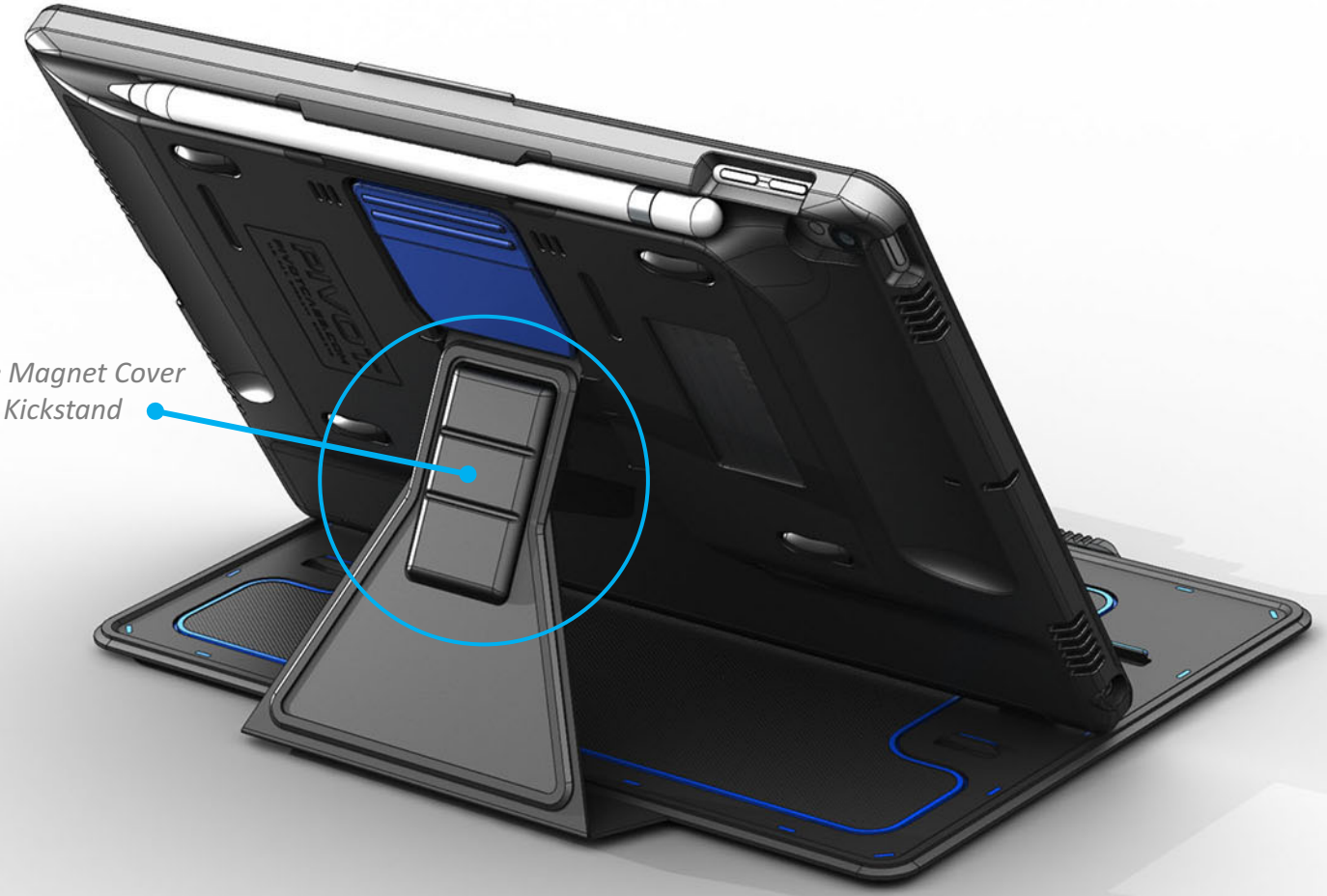

Why? - Previously, misuse of the Folio Cover could result in the Magnet Cover being damage or detached.

Concept Briefing. For internal or special release user reference only. Proprietary and confidential.

Folio Cover Improvements

01 – New Magnet Cover Design

Magnet Cover - The revised design of the Magnet Cover reverses the direction of the magnet installation and captures them securely within a polycarbonate housing.

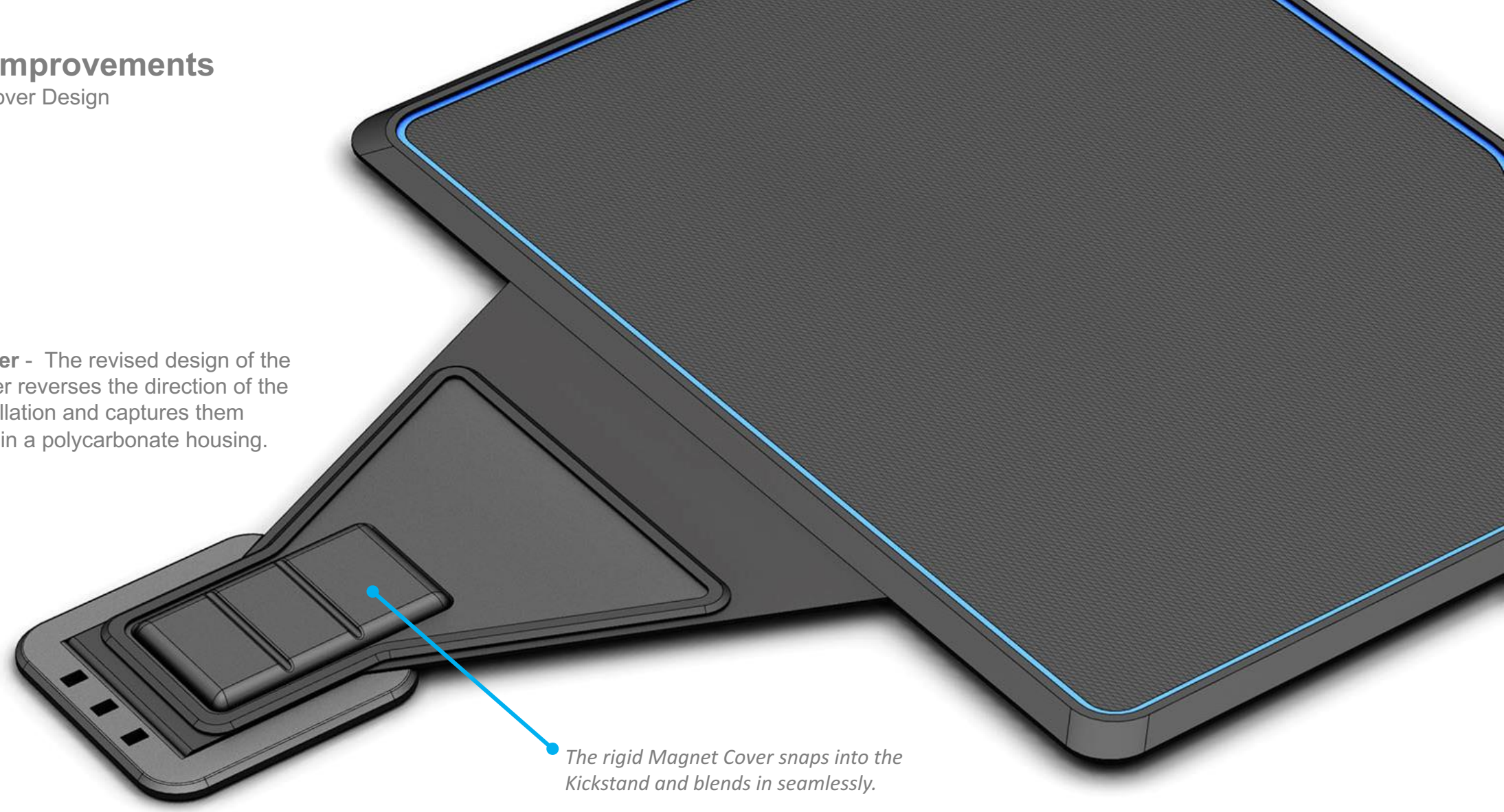

The rigid Magnet Cover snaps into the Kickstand and blends in seamlessly.

Concept Briefing. For internal or special release user reference only. Proprietary and confidential.

Folio Cover Improvements

01 – New Magnet Cover Design

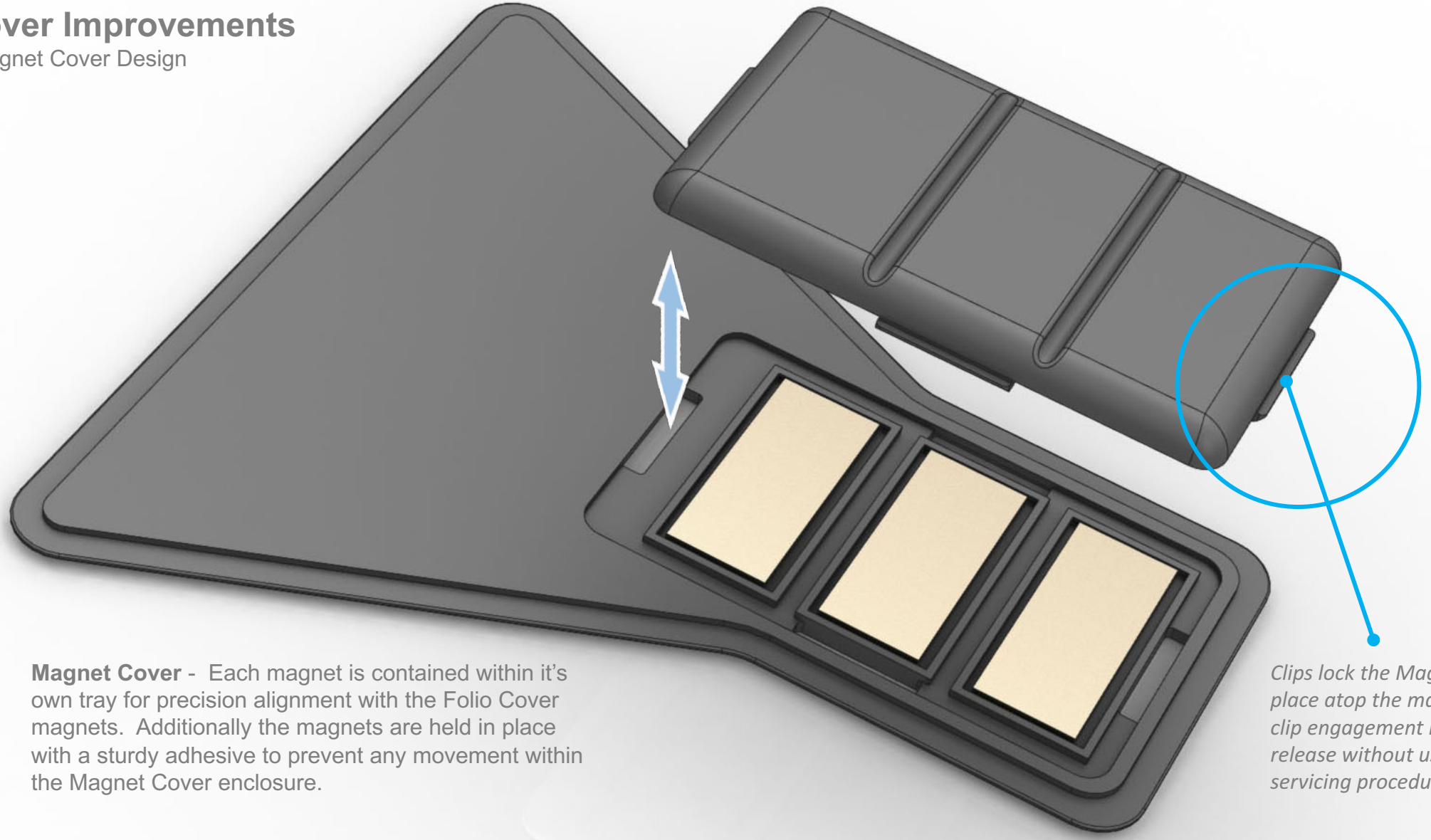

Magnet Cover - Each magnet is contained within it's own tray for precision alignment with the Folio Cover magnets. Additionally the magnets are held in place with a sturdy adhesive to prevent any movement within the Magnet Cover enclosure.

Clips lock the Magnet Cover in place atop the magnet bed. This clip engagement is difficult to release without using specific servicing procedures.

Concept Briefing. For internal or special release user reference only. Proprietary and confidential.

Folio Cover Improvements

02 – Improved Kickstand Design

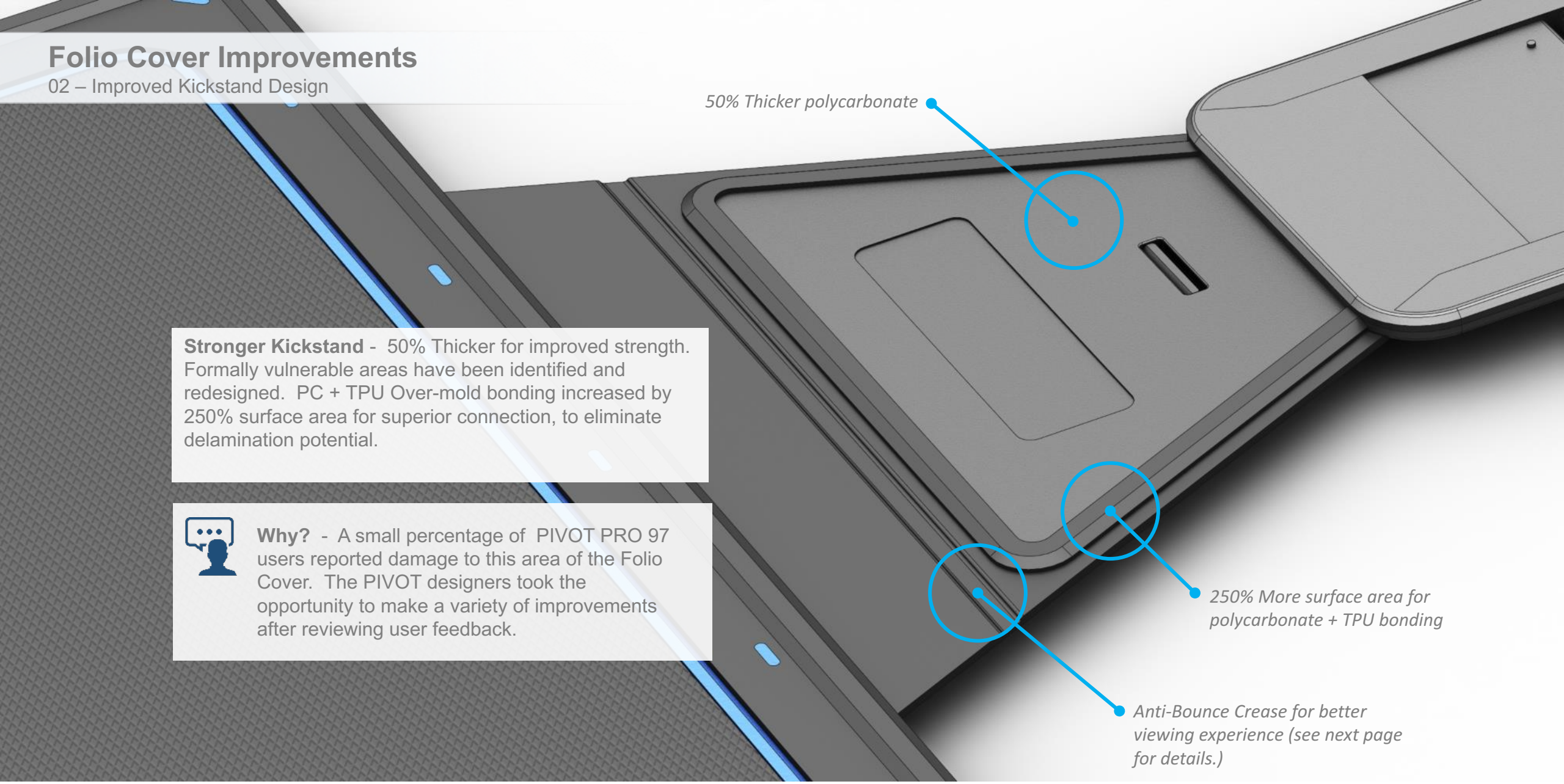

Stronger Kickstand - 50% Thicker for improved strength. Formally vulnerable areas have been identified and redesigned. PC + TPU Over-mold bonding increased by 250% surface area for superior connection, to eliminate delamination potential.

Why? - A small percentage of PIVOT PRO 97 users reported damage to this area of the Folio Cover. The PIVOT designers took the opportunity to make a variety of improvements after reviewing user feedback.

Concept Briefing. For internal or special release user reference only. Proprietary and confidential.

Folio Cover Improvements

03 – Anti-Bounce Crease

Anti-Bounce - This special crease in the TPU, at the base of the kickstand folds neatly to reduce the Folio Cover's tendency to arch and bounce slightly when the user is typing vigorously.

Why? - Conversations with PIVOT users and online feedback made it clear that this was a much wanted upgrade to the previous Folio Cover.

Concept Briefing. For internal or special release user reference only. Proprietary and confidential.

Folio Cover Improvements

04 - 05 – Increased Durability & Stability

4. **More Durable Cover** - 30% Thicker front folio further improves drop protection in ‘Transit Mode’, but with only 0.65mm increase in the total case thickness. There is also an approximately 185% increase in PC + TPU bonding surface area on the front folio cover.

5. **Improved Stability** - The viewing slots in the Folio Cover and the Viewing Feet on the Smart Edge have a greater depth of engagement when in the viewing mode. The PRO 105 also features *colored highlights on the viewing slots to help with user orientation. *(*PRO 105 only)*

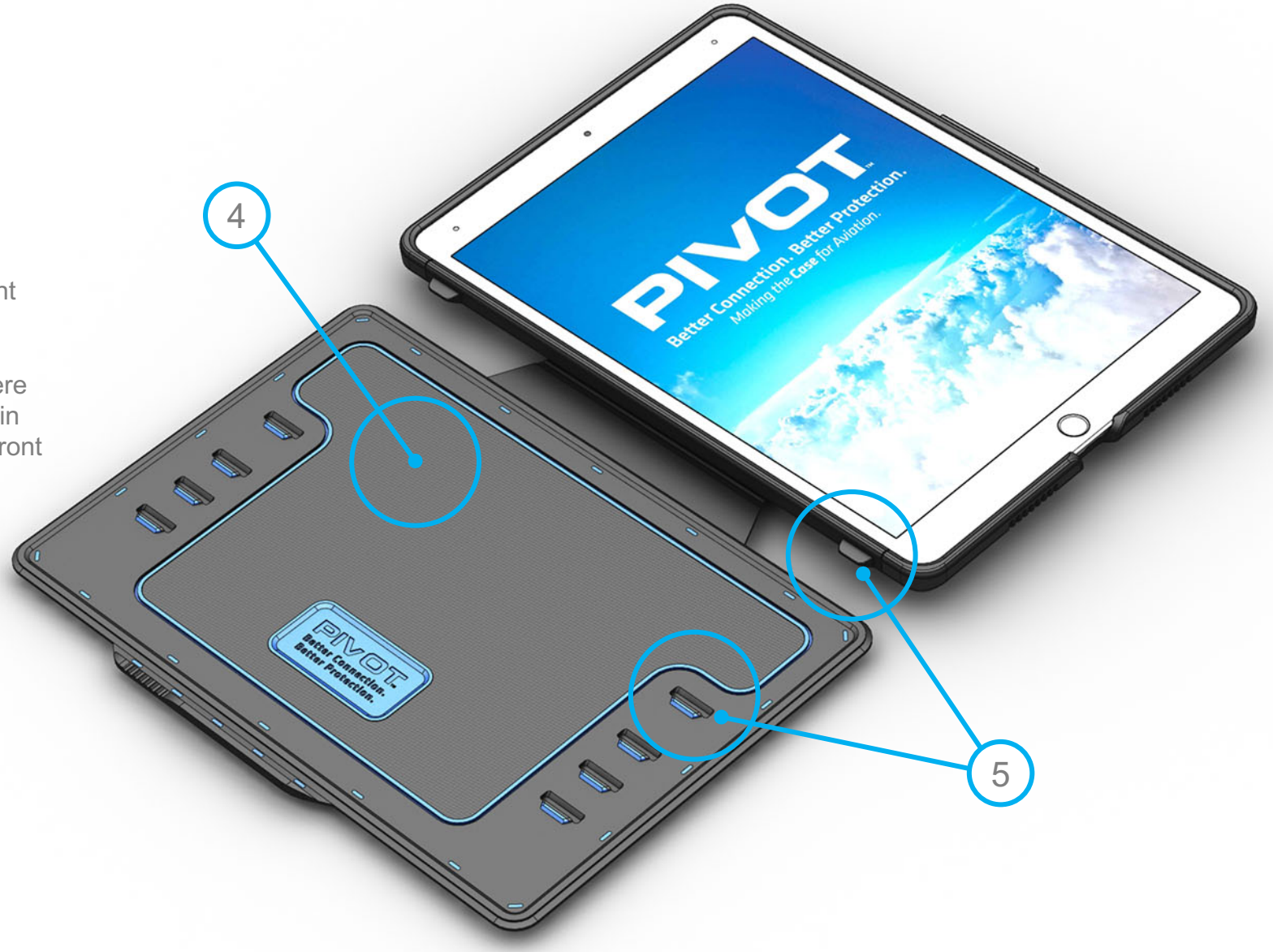

Concept Briefing. For internal or special release user reference only. Proprietary and confidential.

Folio Cover Improvements

06 – Stronger Surface Grip

Better Viewing Experience - The front TPU perimeter has been extended to maximize contact area with table-top surfaces when the folio is used in viewing mode. This larger grip surface improves stability and decreases sliding potential.

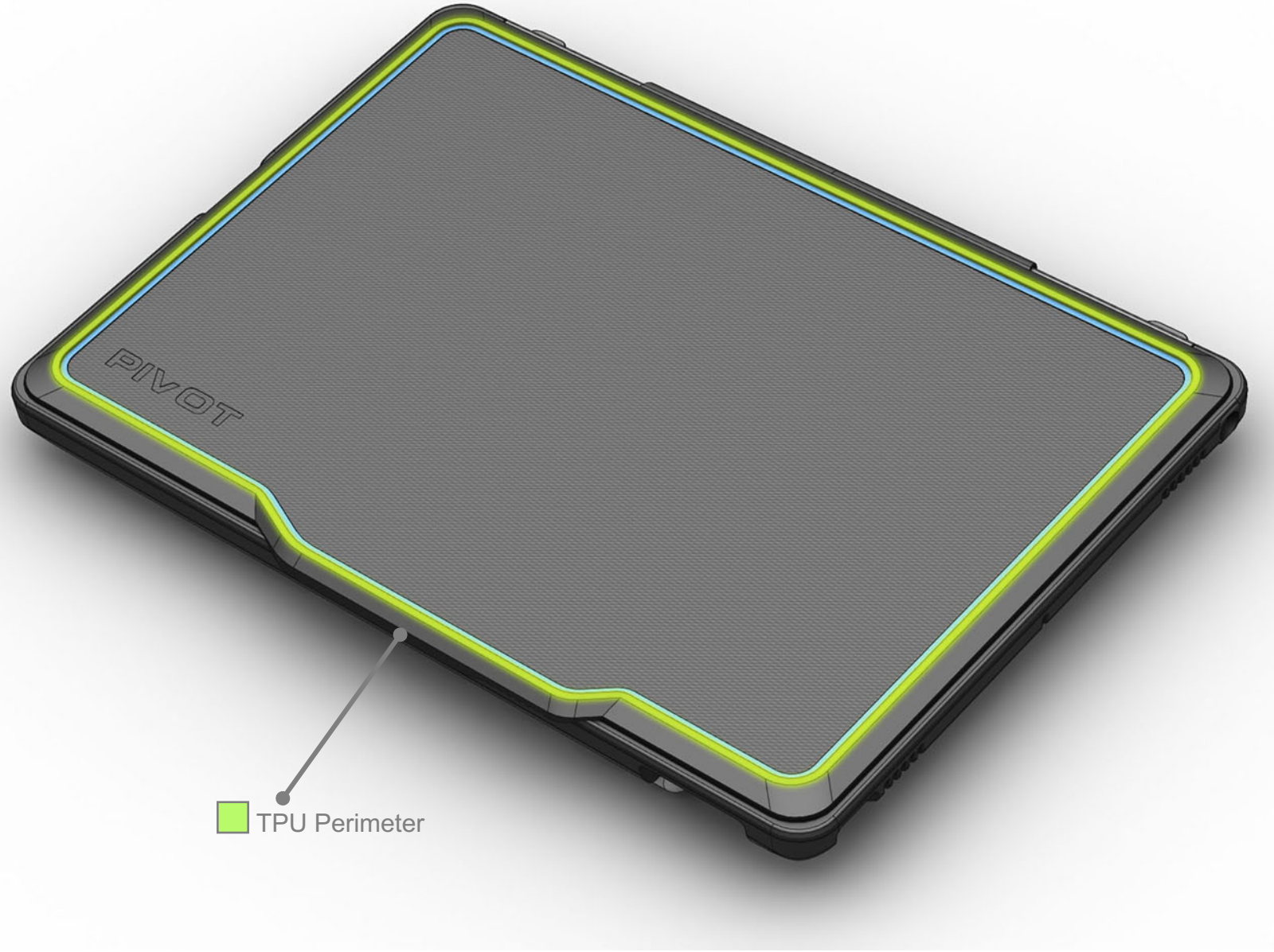

Concept Briefing. For internal or special release user reference only. Proprietary and confidential.

Additional Considerations

Smart Connector Compatible

Keyboard Compatible - Both the PIVOT PRO 105 and OMNI 97 are compatible with the Apple Smart Keyboard. This is made possible by the PIVOT Smart Edge, which is removeable.

Concept Briefing. For internal or special release user reference only. Proprietary and confidential.

Additional Considerations

Continuous Protection

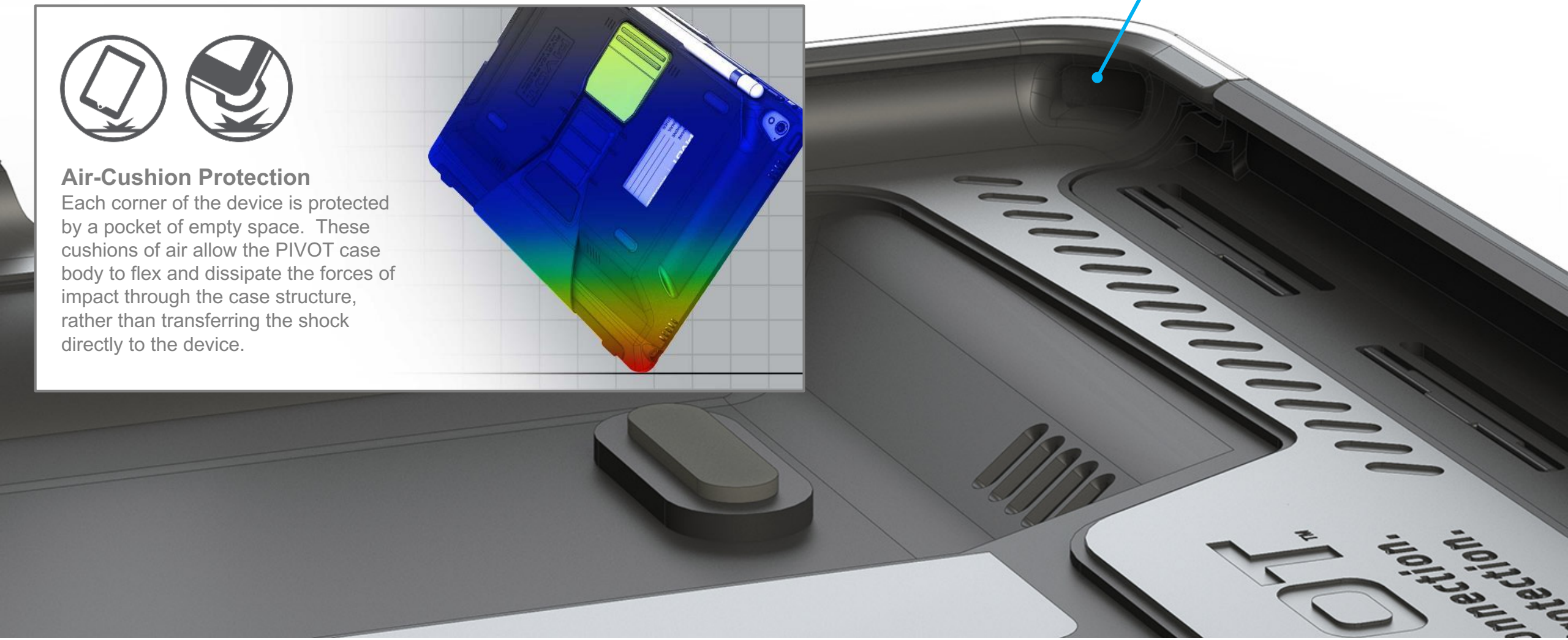

Air-Cushion Protection

Each corner of the device is protected by a pocket of empty space. These cushions of air allow the PIVOT case body to flex and dissipate the forces of impact through the case structure, rather than transferring the shock directly to the device.

Concept Briefing. For internal or special release user reference only. Proprietary and confidential.

Additional Considerations

PIVOT Custom Colors

Military Deployment / High Heat Environments - PIVOT offers two options for use in high heat environment or military deployment. The Gray or Desert Tan case colors reflect a percentage of direct sunlight, further reducing the thermal transfer to the device.

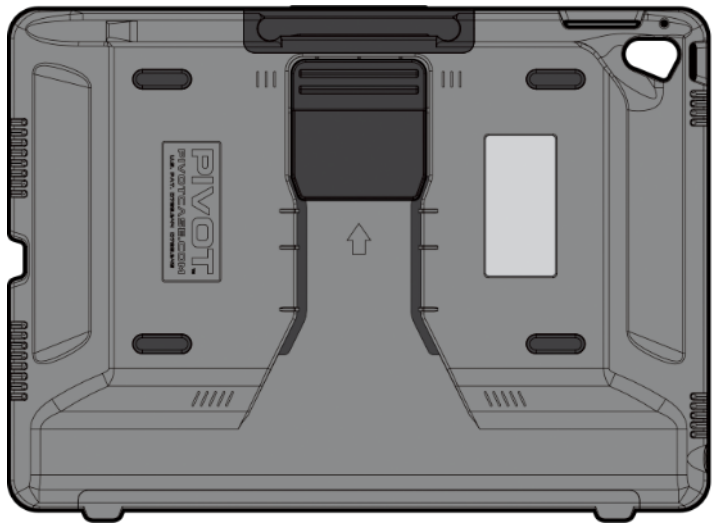

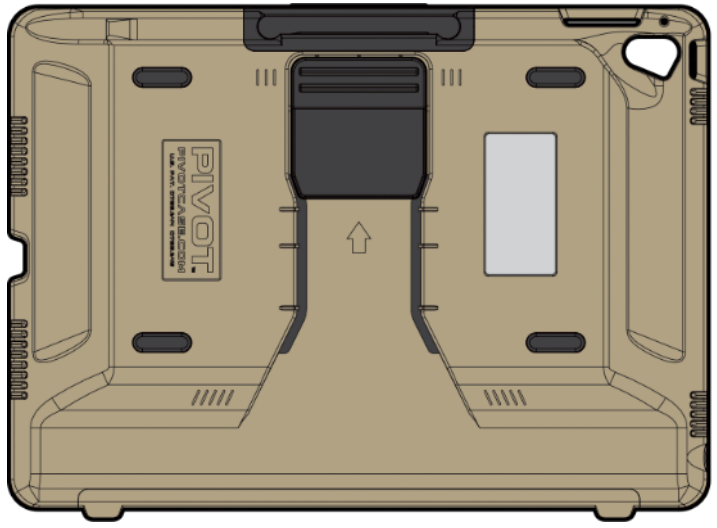

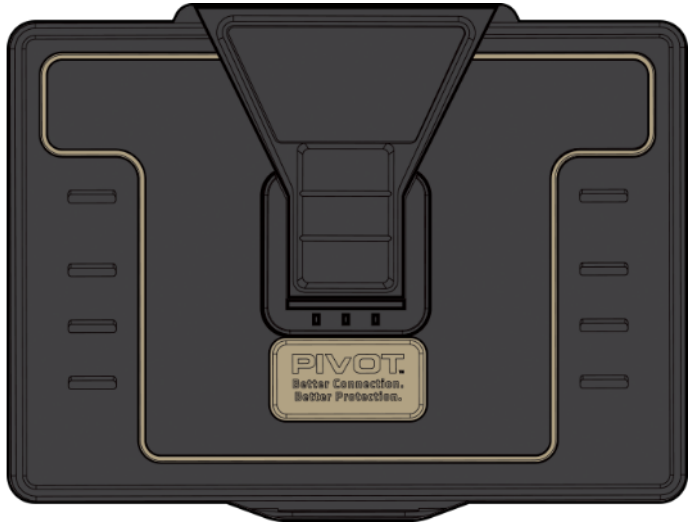

Concept Briefing. For internal or special release user reference only. Proprietary and confidential.

Additional Considerations

PIVOT Custom Colors

Customer Colors - For bulk customer orders, the PIVOT Clip and Folio Cover are available in custom colors.

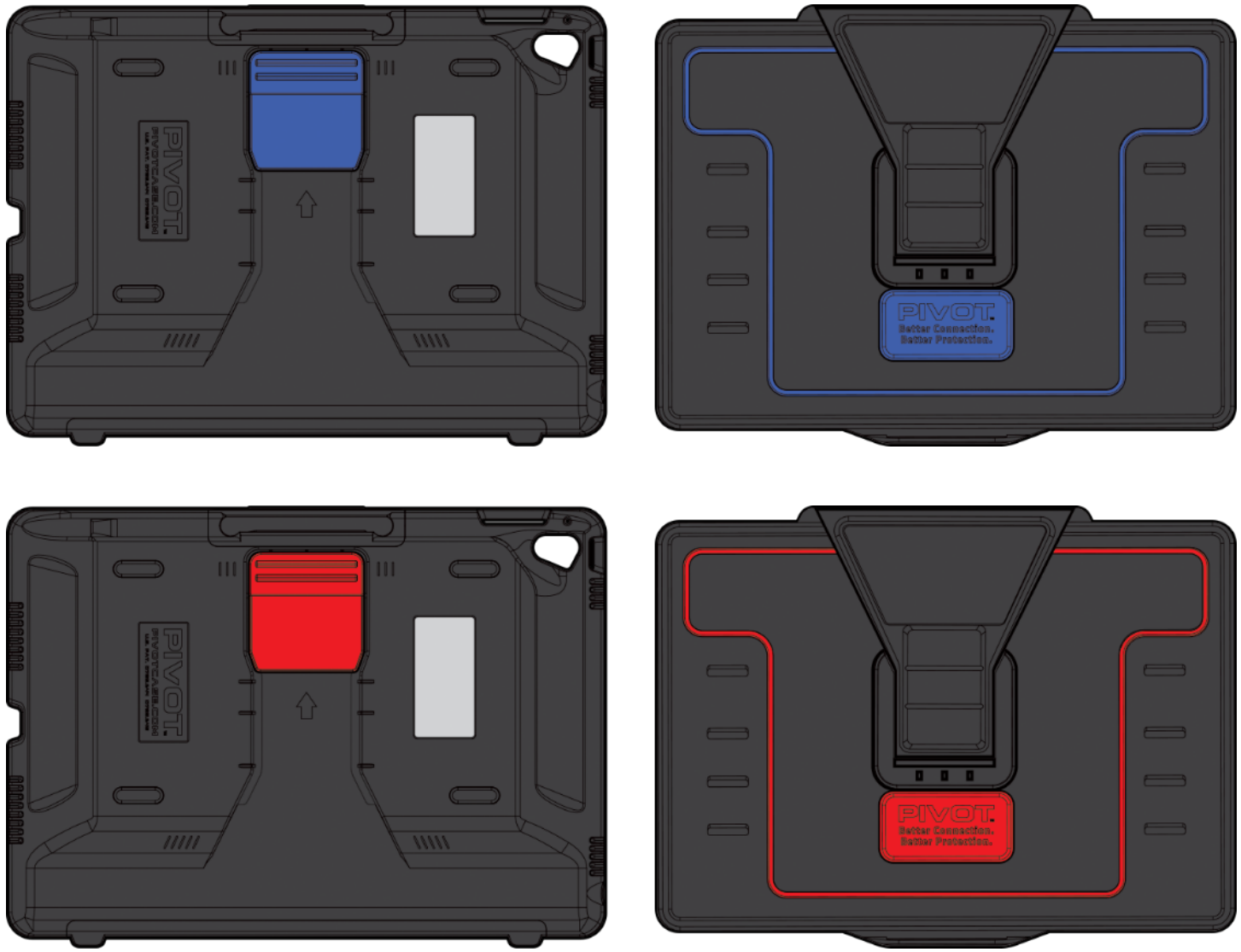

Concept Briefing. For internal or special release user reference only. Proprietary and confidential.

PIVOT™

Better Connection. Better Protection.

*Making the **Case** for Aviation.*

Thank you

Concept Briefing. For internal or special release user reference only. Proprietary and confidential.

ADVANCE RELEASE! *(Product coming F/W 2017)*

User Guide

PRO 105

For iPad Pro 10.5”

PIVOT™

Better Connection. Better Protection.

[Issued 09.07.2017. Version R1]

PIVOT™

Better Connection. Better Protection.

*Making the **Case** for Aviation.*

PRO 105 | User Guide

For iPad Pro 10.5”

Read Before Use

For optimal performance and maximum satisfaction with your PIVOT case, please follow this set of simple recommendations to ensure proper deployment and superior device protection.

***WARNING:** Your PIVOT case is designed to hold your device firmly to protect against accelerated impacts. Once installed, your device will be held securely on all sides. It is not intended to come out easily. When you get a PIVOT case, it means you’re getting the best. PIVOT products maximize protection and minimize the need to remove the device from your PIVOT case.*

If you need to remove your device, please refer to this document or visit PIVOT online for instructions to avoid unnecessary damage to your device and PIVOT case.

Air Cushion

Lightweight

Thermal Control

Tough Protection

Keyboard Compatible

Stylus Support

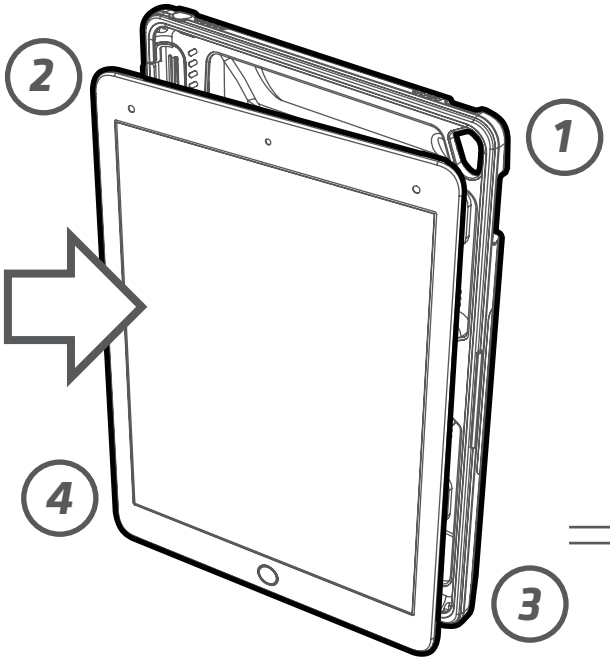

Installing Device

Align device camera and buttons with the corresponding access points in the case body and press the corners of the device into the case in the order shown. The device will snap securely into the case's perimeter seal.

Pro Tip!
Open the ID window and write your info on the ID card before installing the device.

WARNING!
Do not use excessive force or tools of any kind during install or removal of device. Doing so may cause damage or personal injury.

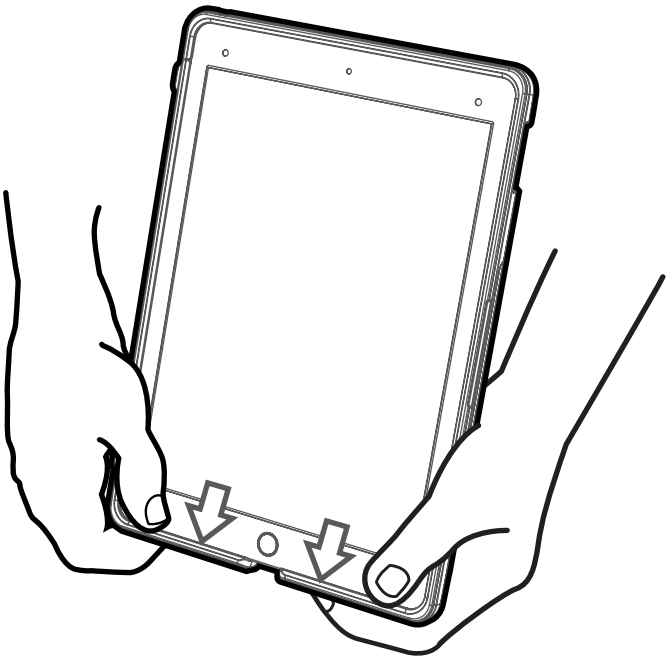

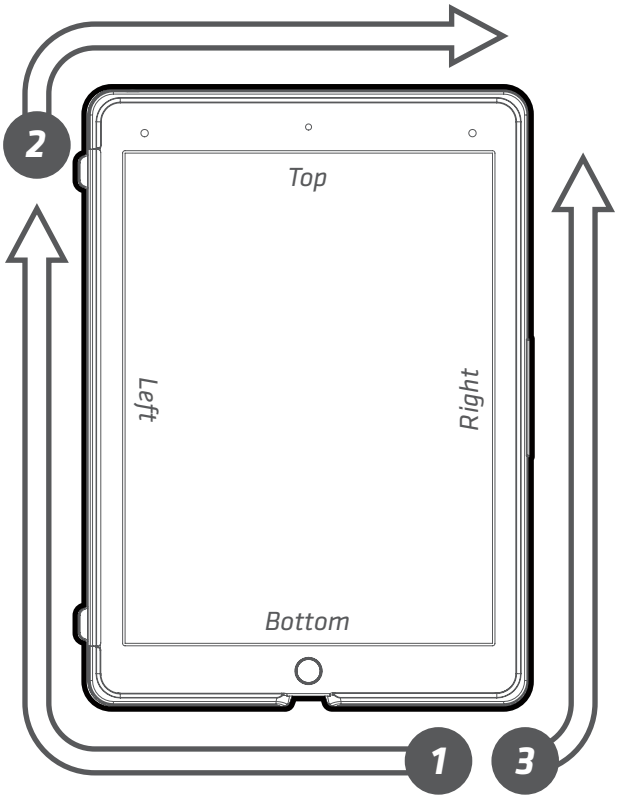

Removing Device

Beginning with the bottom edge near the charging port, press firmly using your thumbs to disengage the case seal. Continue carefully pressing around the edges of the case to release the device in the order shown. Do not attempt to pry or force the device from the case.

1. *Start at the bottom and move left*
2. *Continue around the top edge*
3. *Release the right edge to remove device*

Keyboard Compatible

To convert for use with the Apple™ Smart Keyboard, simply remove the protective side edge to reveal the Smart Connector. Using your thumb and forefinger, begin disengaging the clips by gripping the side edge firmly and rocking with mild force until the clip gently unlocks. Start with one end and continue releasing the clips as you move across the full length. Do not use excessive force or attempt to rip the parts apart.

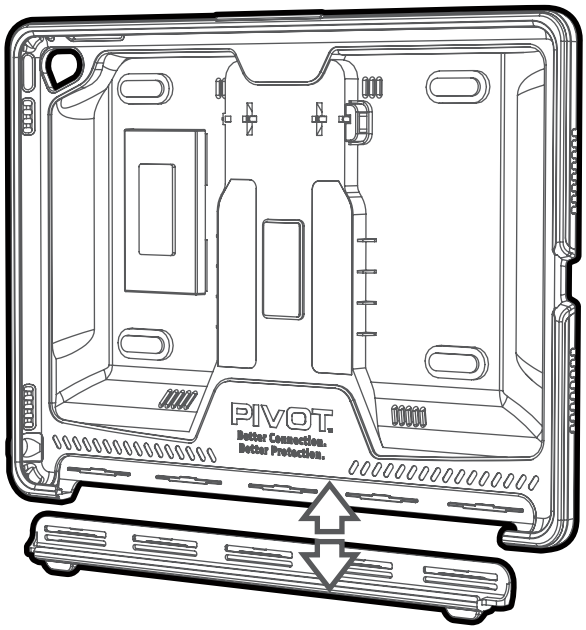

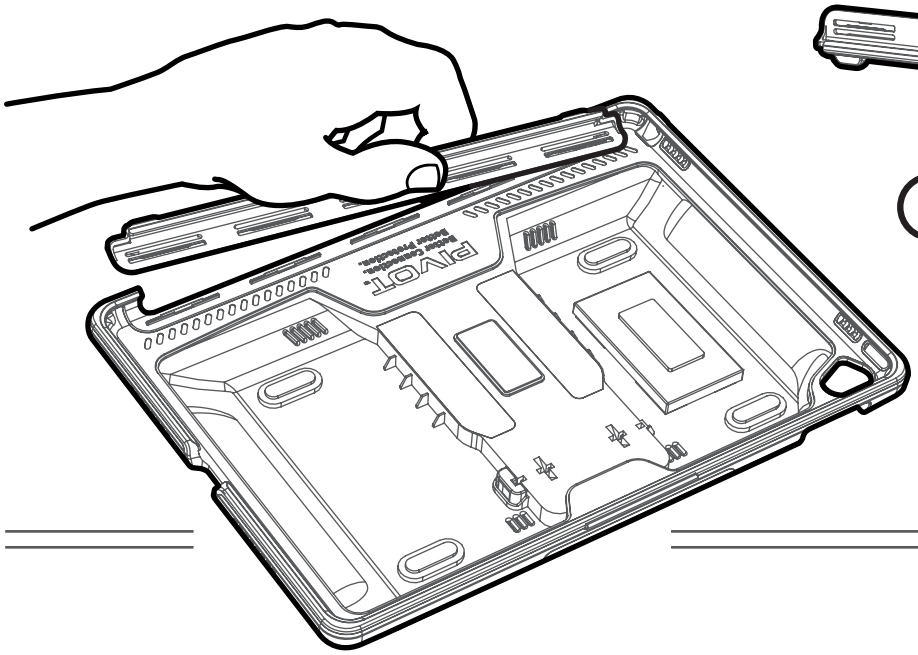

Pro Tip!

Store any removable parts in a safe and memorable location so they are available if you need them in the future.

Stylus Support

The Apple™ Pencil and similarly sized stylus wands snap firmly into the integrated stylus channel.

Please follow the orientation shown here for the most secure grip. The pencil tip cradle is specifically designed for the Apple Pencil to prevent leverage that may result in accidental release from the stylus channel.*

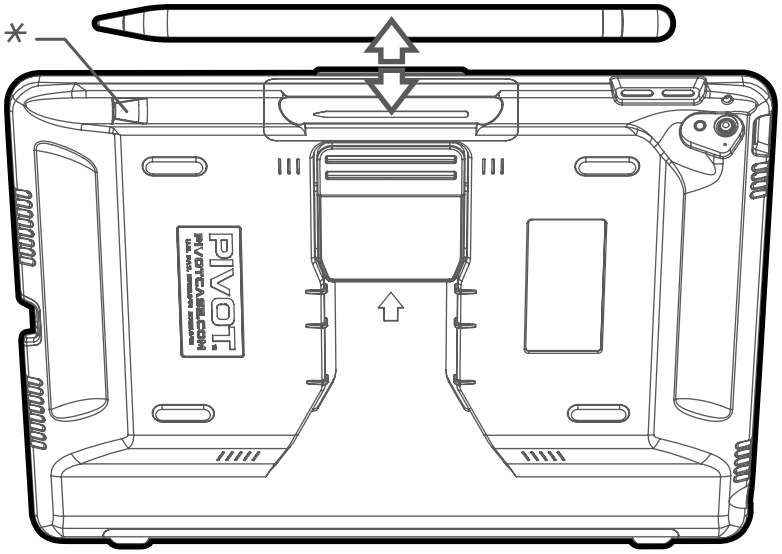

Folio Cover

Includes the main Folio Cover with Viewing Slots, Kickstand Hinge and the folio Mounting Plate.

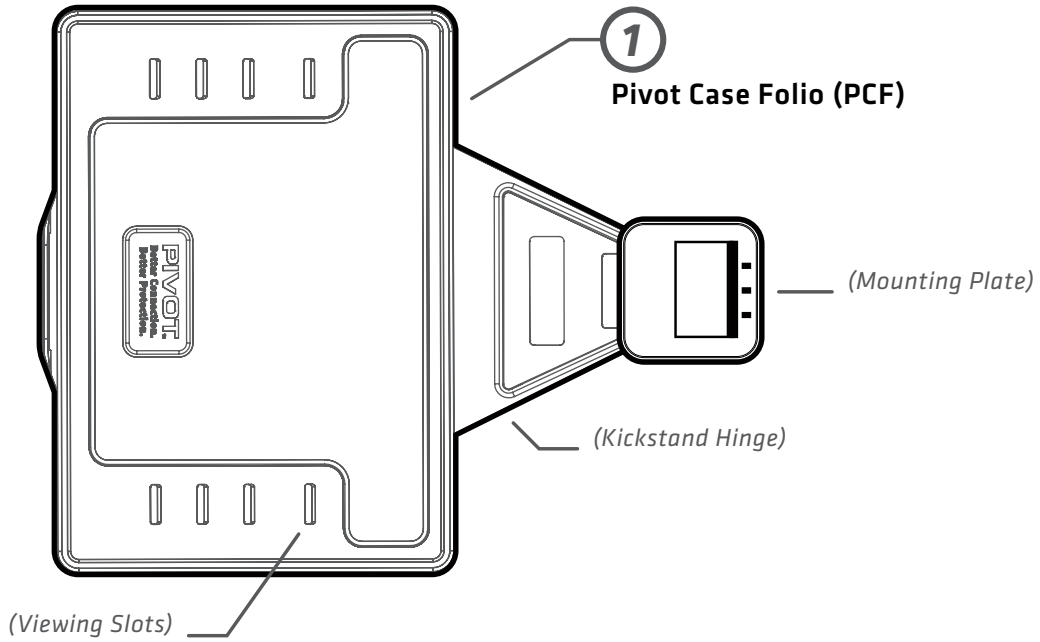

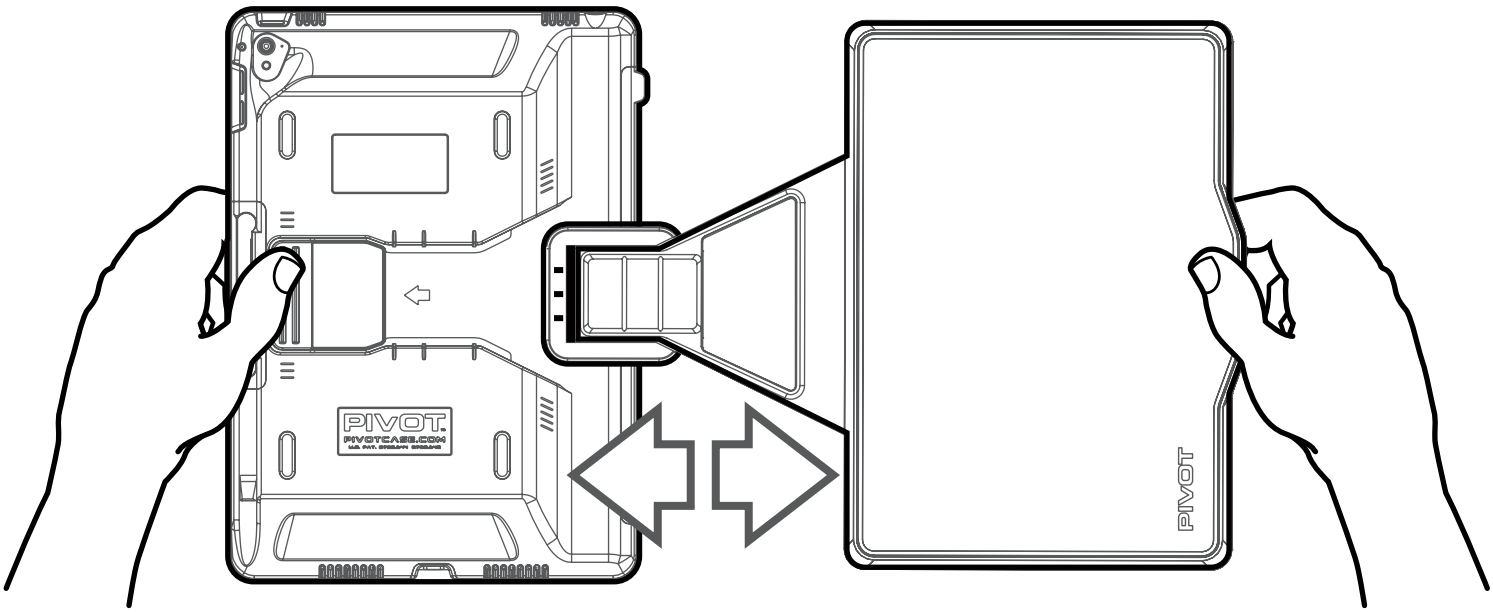

Assembly:

Align the folio cover with the back of the Pivot case as shown. Ensure the folio's mounting plate is placed flat against the back of the case with the three slots directed towards the clip. Slide the folio into the mounting channel and secure with the clip.

Removal:

Disengage the folio cover from the Pivot mounting channel by pressing the clip on the back of the case, which will release the folio. With the clip pressed, gently pull the folio cover out of the mounting channel. Store the folio in a safe and memorable location.

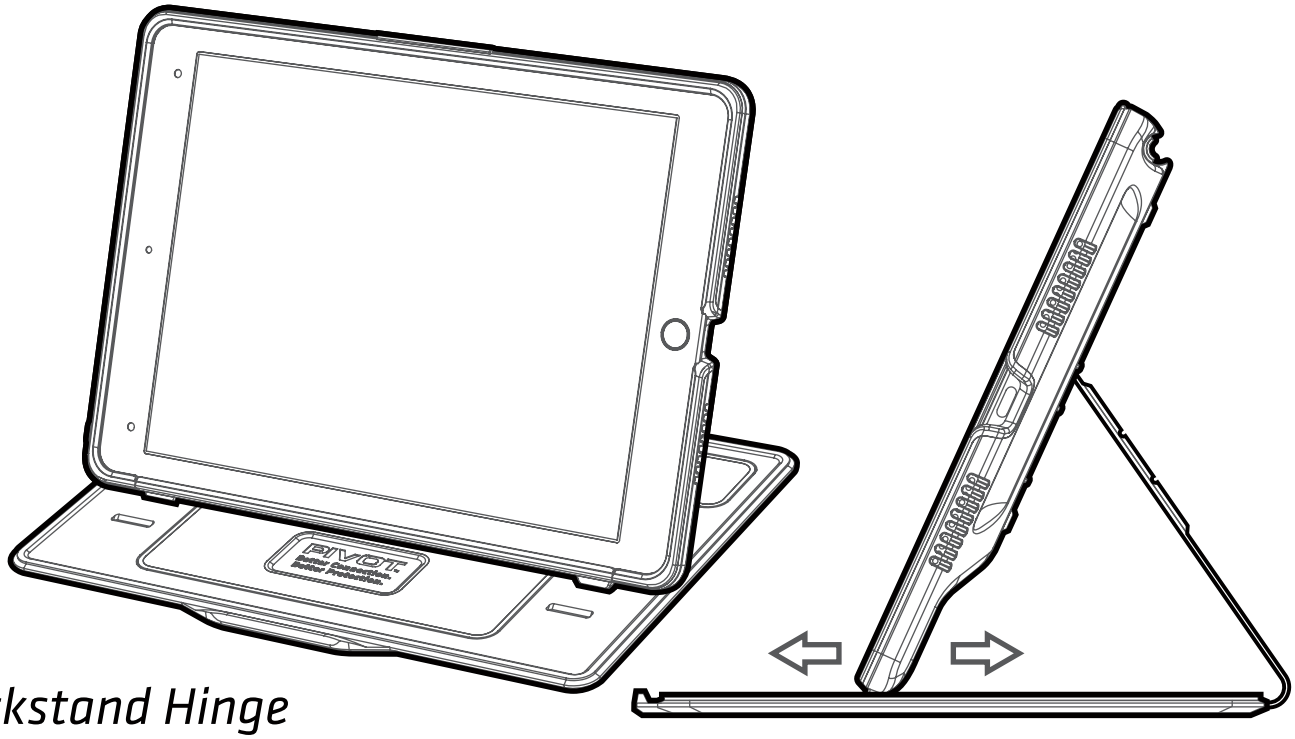

Kickstand Hinge

Use your folio cover for convenient viewing in four different angles. Open the folio cover and fold into the position show. Engage the flanges on the edge of the case with the viewing slots for superior stability.

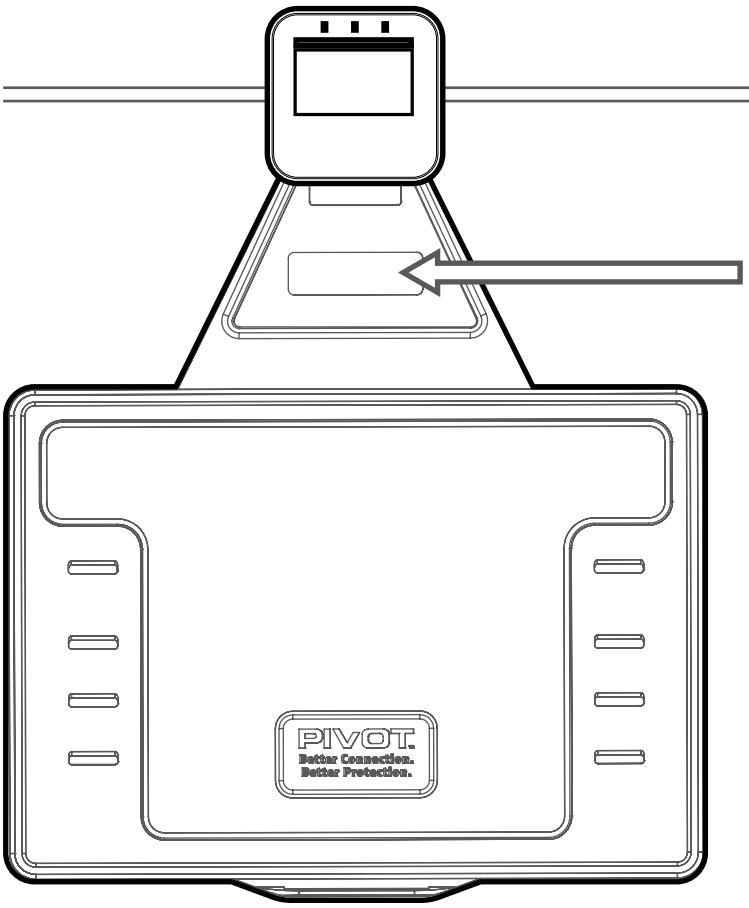

Label Area
1/2" x 1 3/4"

Folio I.D. Label

The folio cover includes an I.D. labeling area ready for use with standard adhesive labels. Download the label template from the manufacturer's website and create your I.D. label using ink jet or laser printers.

Recommended: ***Avery Template 5167***

Using The Folio Cover

The PRO 105 Folio Cover is easy and intuitive to use. Simply follow the instructions below when opening and closing your cover.

1. *Release the folio latch at the front right edge*
2. *Open the cover*
3. *For hand-held viewing, fold the cover back as illustrated, just like a book*

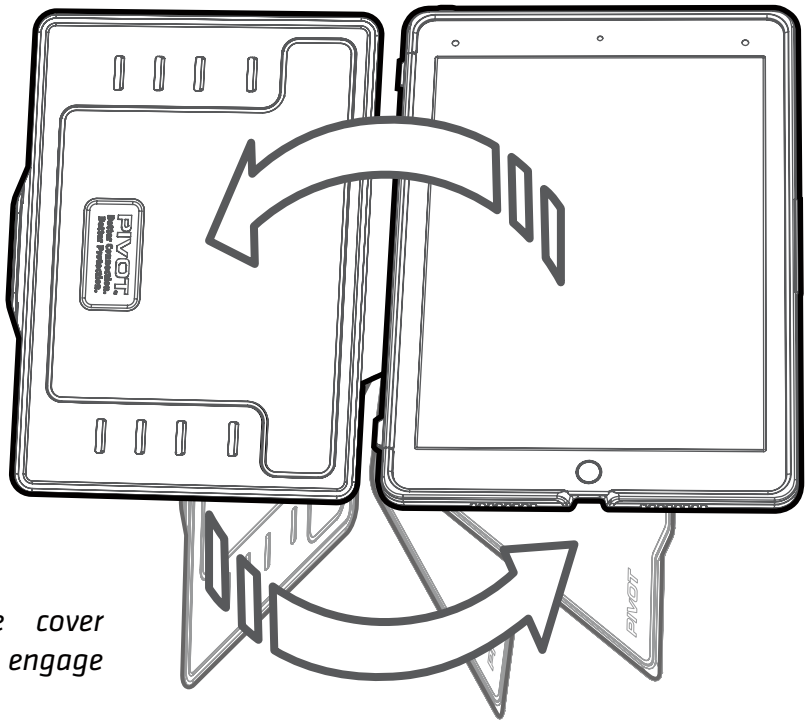

Pro Tip!
Continuously rotate the cover around until the magnets engage with the back of the case.

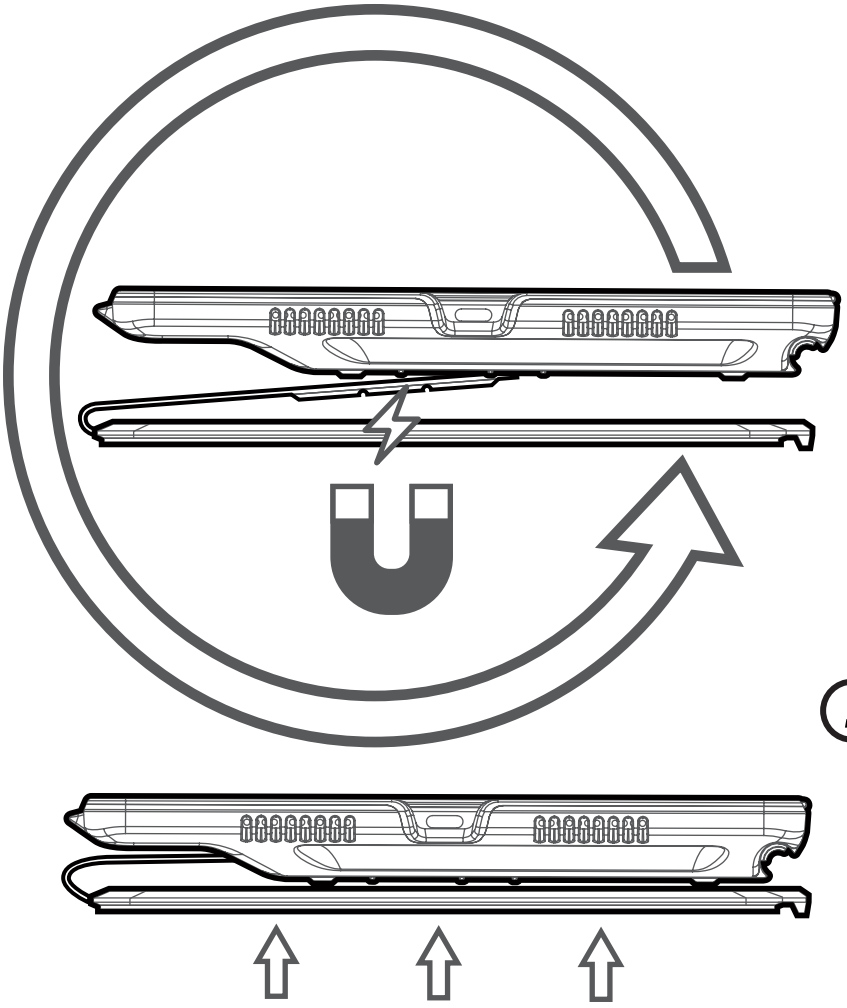

Magnetic Folio Cover

An added convenience feature of the PRO 105 Folio Cover is the magnetic assist when in hand-held viewing mode. Magnets react to help hold the cover in a comfortable position while the user is holding it.

Open the Folio Cover like a book to feel the magnets engage. This is the correct and intended position of the folio when in hand-held viewing mode. Any other position is incorrect and could result in damage to the cover.

Pro Tip!
The Folio Cover includes magnets to activate the auto-sleep/wake feature of the iPad. Manage this feature in the device settings menu.

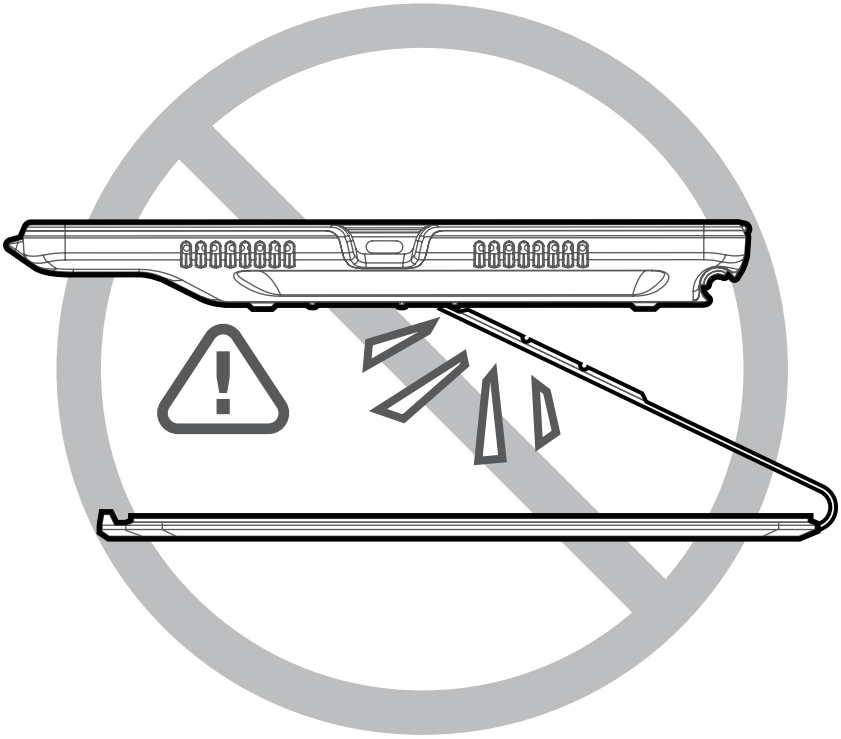

Incorrect Use

The Folio Cover is designed to protect the device during transit and provide convenience features when in viewing mode. It is very durable if used as intended. However, the folio can be damaged if misused and put under repeated stress.

Do not fold the Folio Cover beyond the intended angles indicated by the viewing slots on the inside of the cover or fold incorrectly when in hand-held mode. Doing so may result in damage to the magnetic convenience features.

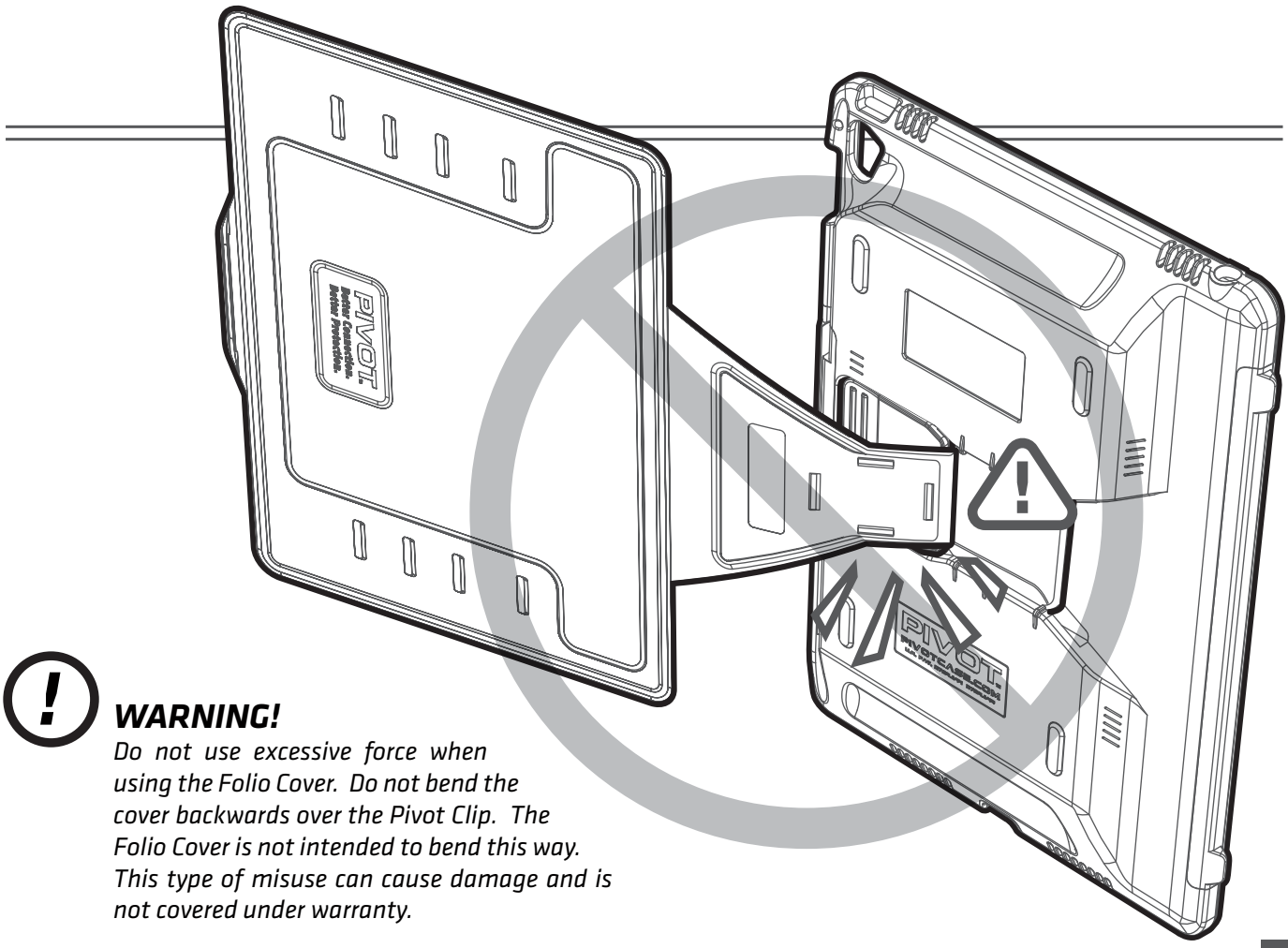

WARNING!

Do not use excessive force when using the Folio Cover. Do not bend the cover backwards over the Pivot Clip. The Folio Cover is not intended to bend this way. This type of misuse can cause damage and is not covered under warranty.

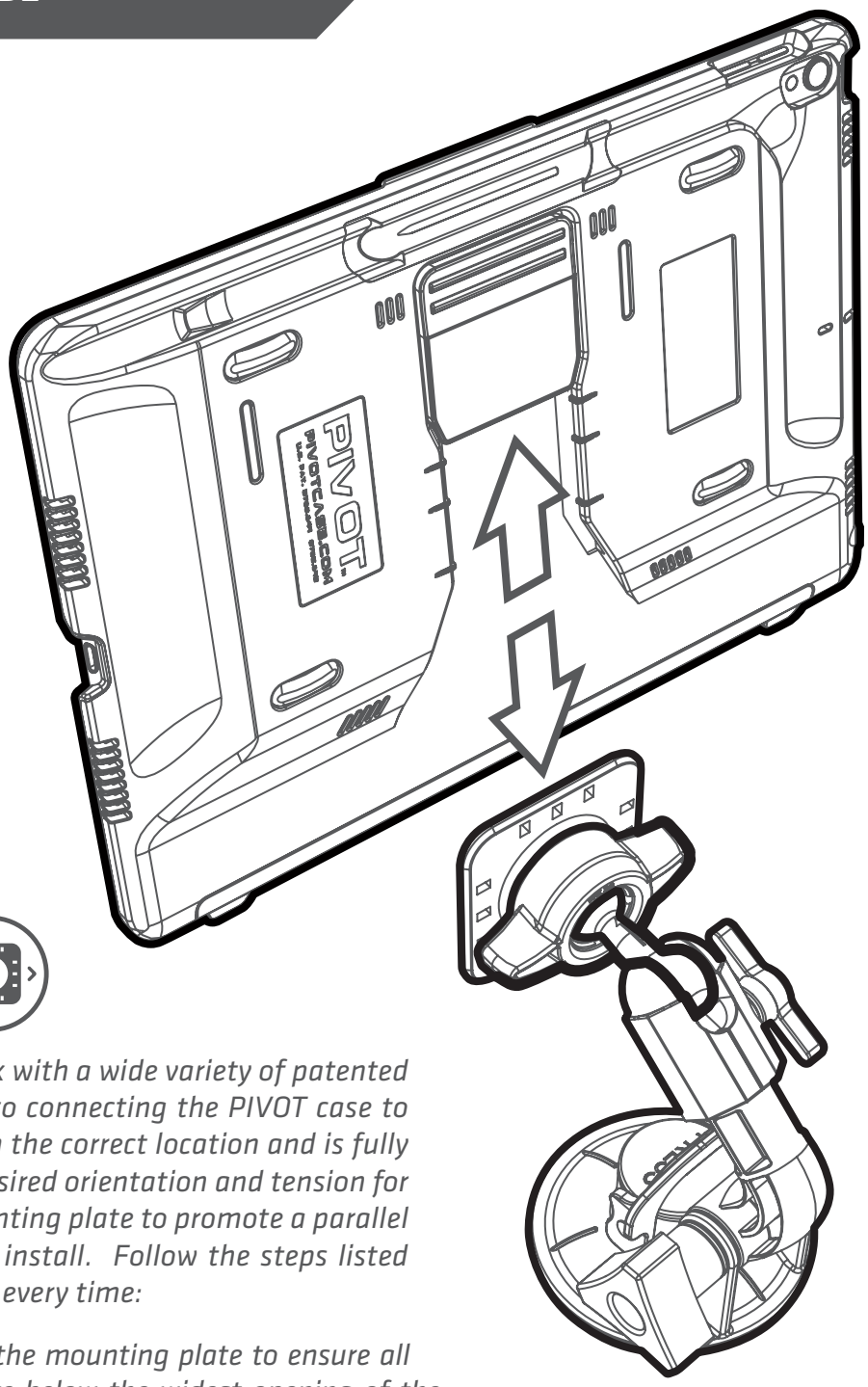

Did You Know?
PIVOT Mounting Solutions are interchangeable. Each PIVOT Mounting Solution case will always connect securely with every PIVOT Mount.

Universal Mounts

Your PIVOT case is designed to work with a wide variety of patented PIVOT Mounting Solutions. Prior to connecting the PIVOT case to the mount, confirm the mount is in the correct location and is fully secure. Adjust the mount to the desired orientation and tension for your device type. Position the mounting plate to promote a parallel orientation to the case during the install. Follow the steps listed below for secure mount connection every time:

1. Raise the PIVOT case ABOVE the mounting plate to ensure all corners of the mounting plate are below the widest opening of the mounting channel on the case body.

2. Next, lower the case body onto the mounting plate. You will feel the mounting plate being guided into the case's mounting channel.

3. The connection is complete when you hear the audible "CLICK" of the clip and mounting plate engaging. It is not necessary to depress the clip during install as it is designed to lock onto the mounting plate when properly inserted.

(Depress the PIVOT Clip and reverse this process to unmount the case.)

Click! Connection

With PIVOT's audible engagement, be confident when hearing the "Click!" your connection is locked in place. If there is no "Click!" sound heard during your installation, you may have a misalignment and should reattempt.

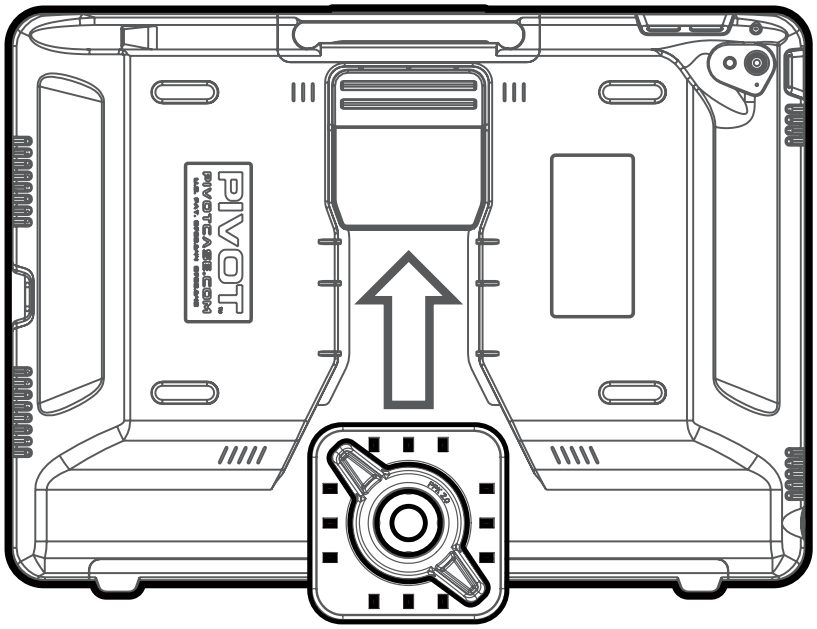

Pro Tip!

It is not necessary to depress the clip during install. If the clip is depressed, holding it in the release position, there won't be an audible "Click!"

Incorrect Mount Alignment

Shown below is an example of an incorrect alignment of the mounting plate and PIVOT case. The clip is not properly engaged with the mounting plate and is not holding the case in the locked position. The mounting plate is not fully inserted into the mounting channel and will not support the weight of the case and device.

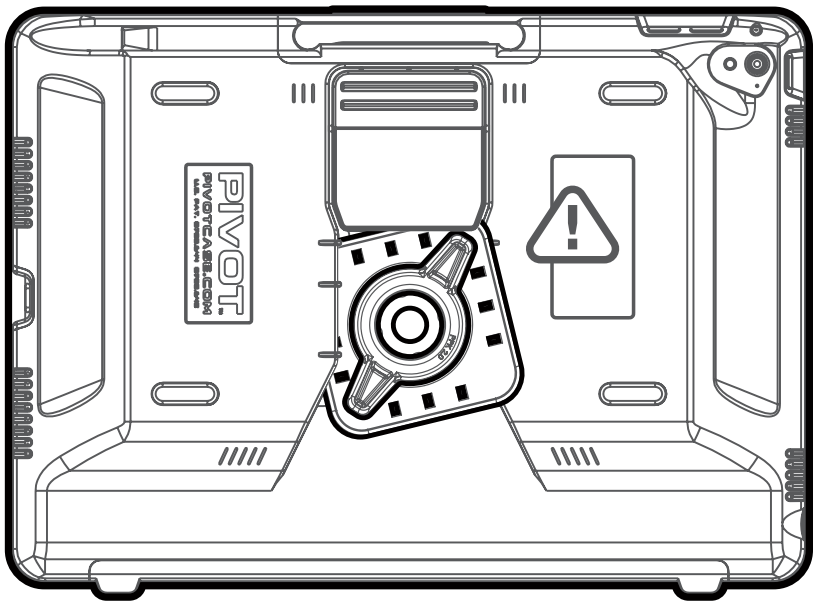

Pro Tip!

If you feel resistance on the mounting plate as it enters the mounting channel, you may be engaging the "speed bumps" along the outer edges. They are designed to provide tactile feedback, which indicates misalignment.

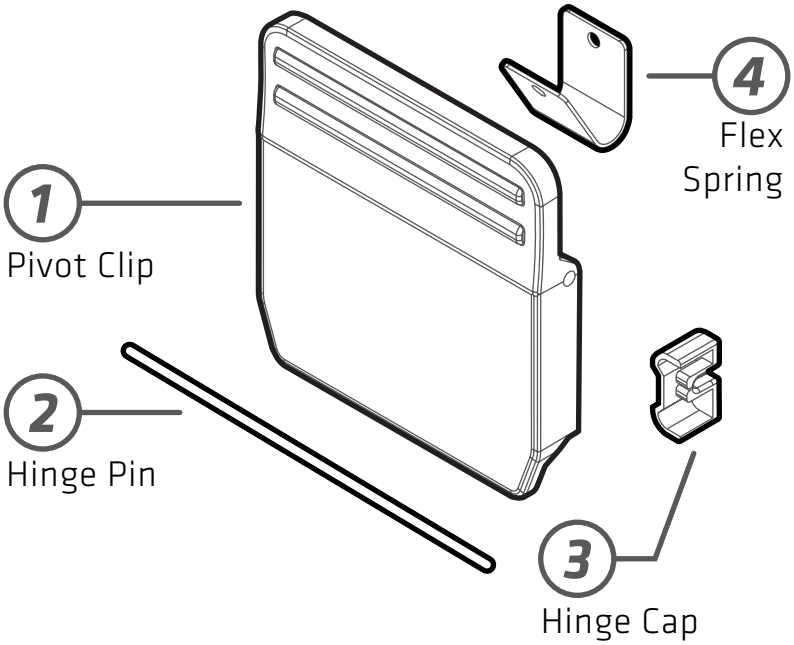

Getting Started

Before beginning any clip replacement procedure, please ensure you have a compatible Pivot Clip Kit. The PIVOT PRO 105 case uses the PCK-2 Assembly, Gen 2.0. It is not compatible with older version of the PIVOT clip.

Required:

1 Unit PCK-2 Assembly, Gen 2.0
- *1pc Pivot Clip*
- *1pc Hinge Pin*
- *1pc Hinge Cap*
- *1pc Flex Spring*

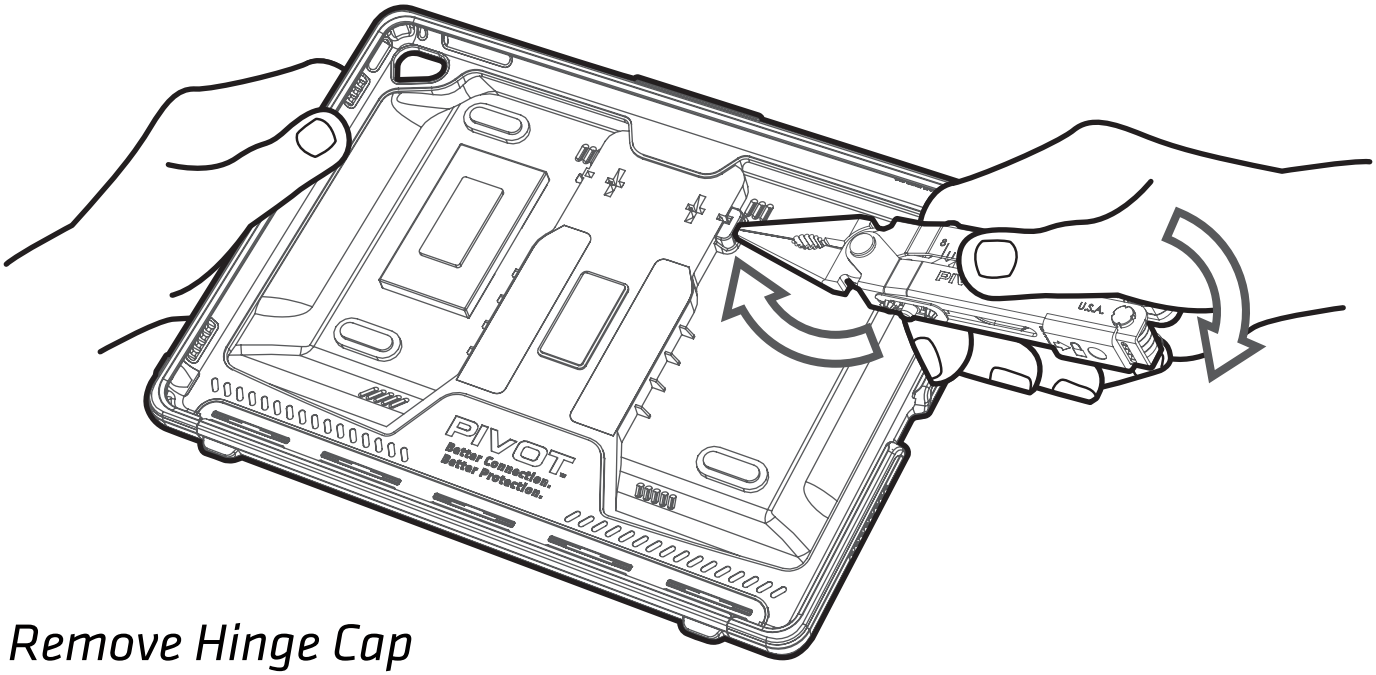

Remove Hinge Cap

a) Remove device. Follow instructions on pivotcase.com for your case and device type.

b) Remove the hinge cap using blunt end of pliers' nose and mild leverage to pry the small cap off. There is a small ledge on the edge of the cap for this purpose.

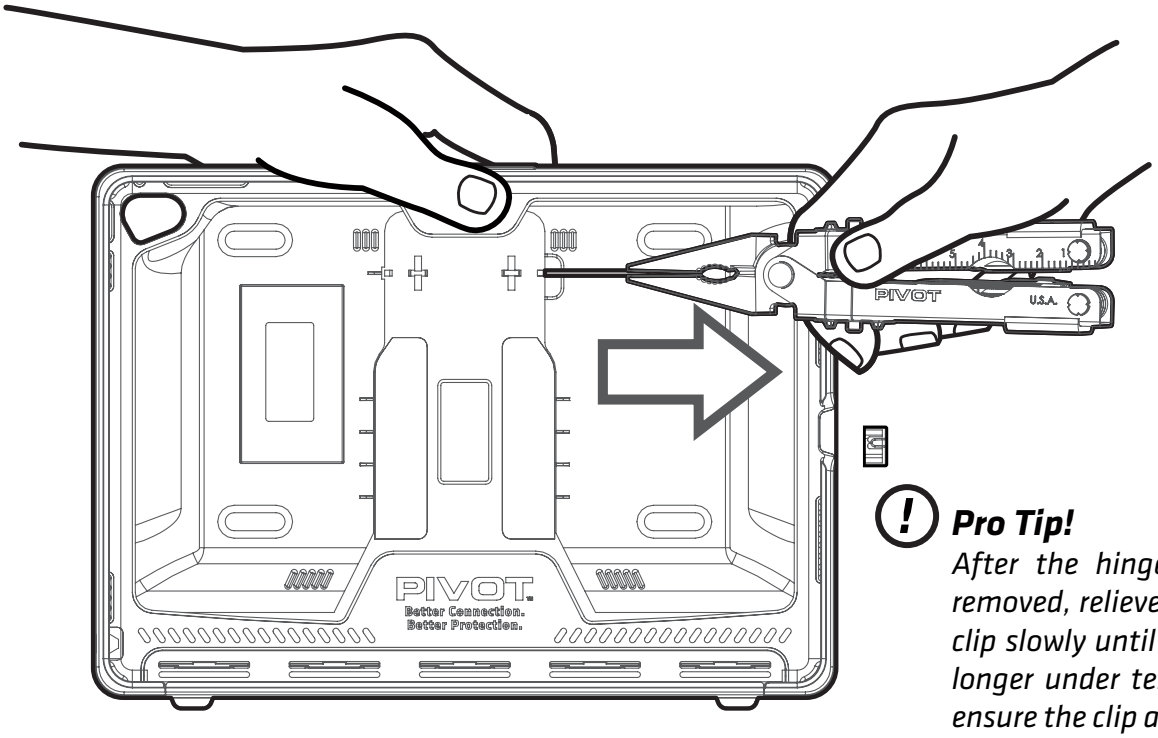

Pro Tip!

After the hinge pin has been removed, relieve pressure on the clip slowly until the spring is no longer under tension. This will ensure the clip and spring can be removed safely.

Remove Hinge and Clip

c) With one hand, hold the clip firmly against the case, apply even pressure to the clip.

d) Using pliers with other hand, pull the hinge pin out. (Be careful, the clip is under spring tension.)

e) Remove clip while holding the spring in place. Replace spring if necessary.

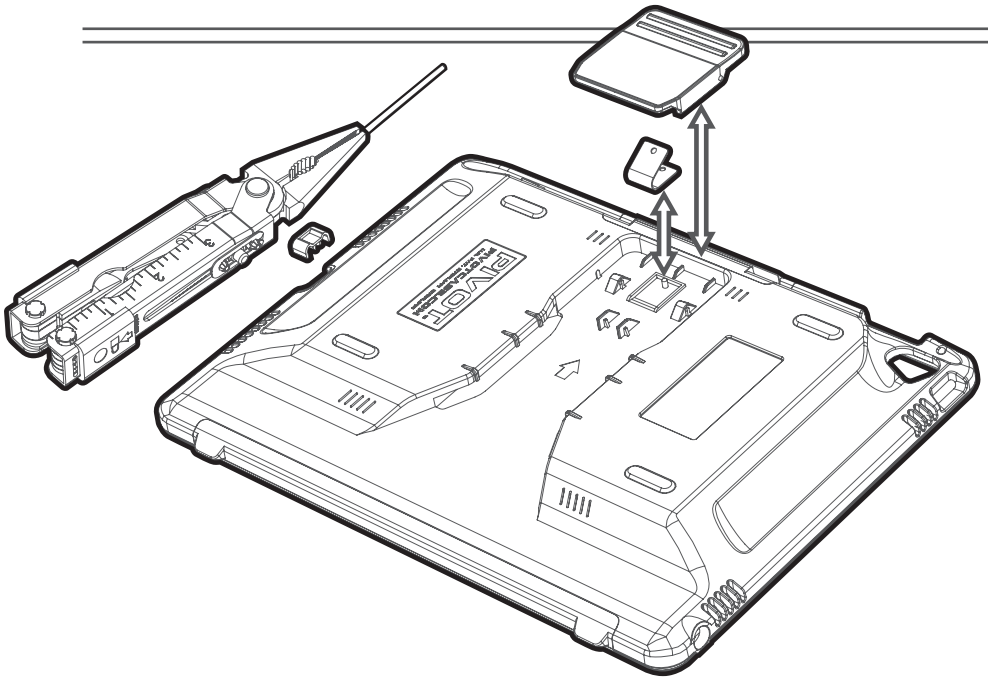

Installing New Clip

f) Install new clip, hold it down firmly while applying even pressure.

g) Reinstall hinge pin, ensure it is inserted all the way.

h) Replace hinge pin cap... DONE!

Orthographic Views:

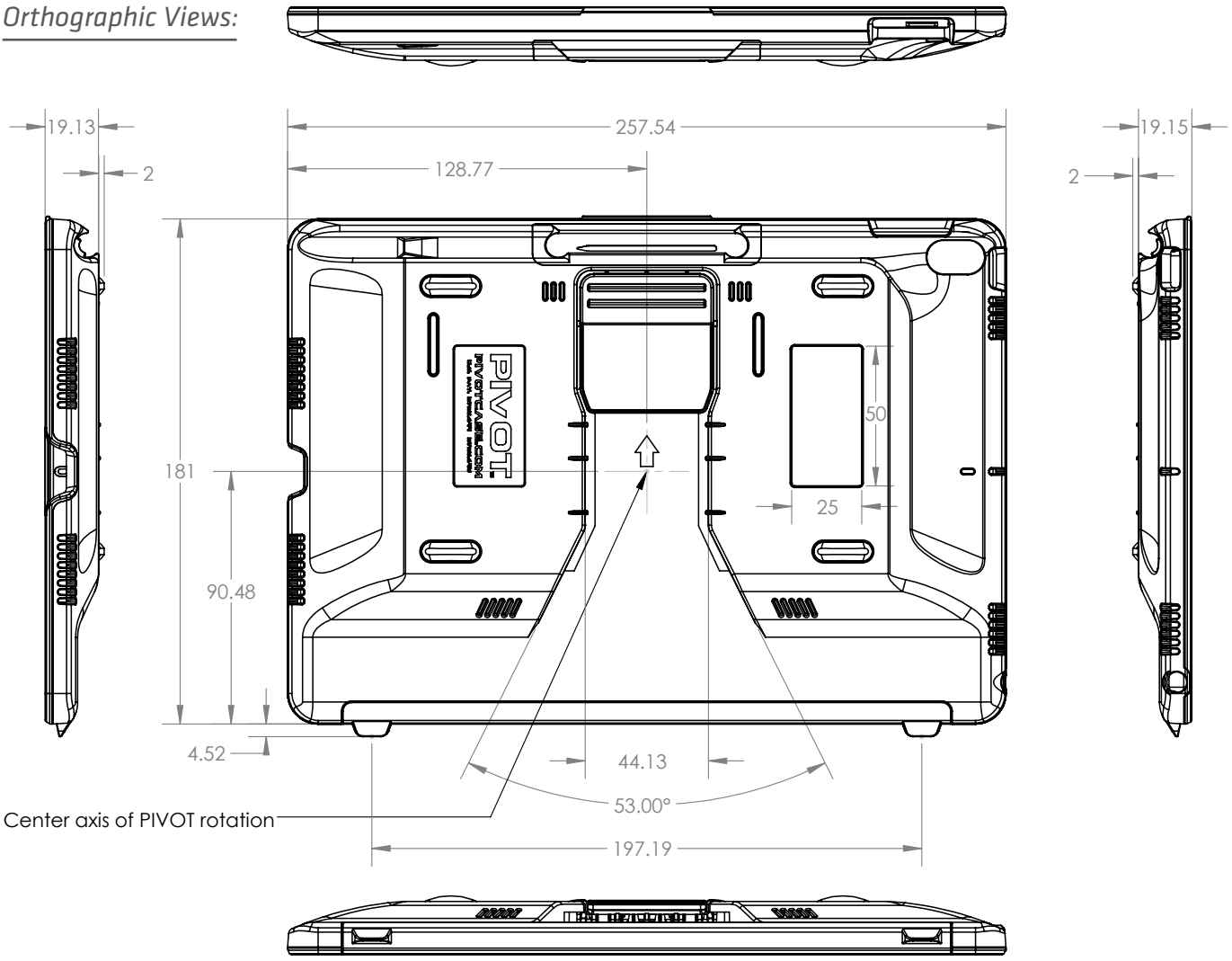

Interior View:

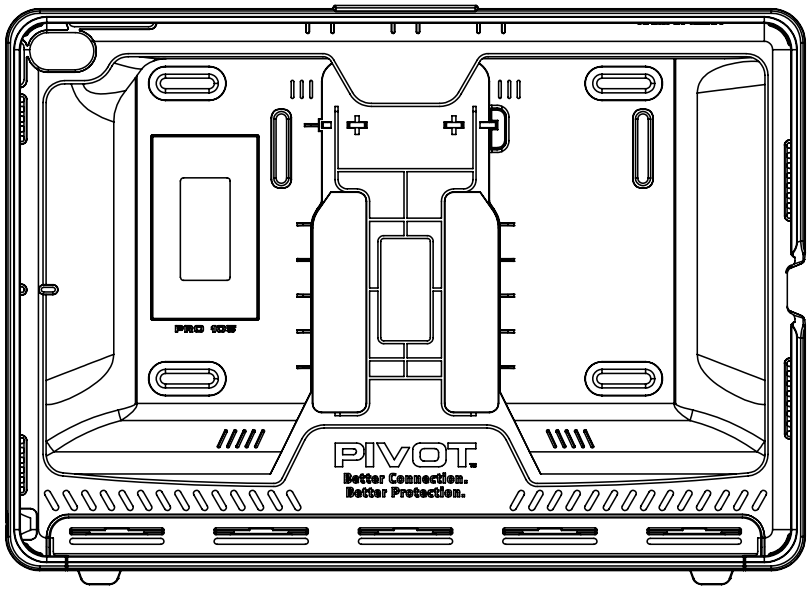

Thank you.

Additional Information

To learn more about your PIVOT case, please visit pivotcase.com for instructional videos, product support and additional information about PIVOT products. You'll find valuable online resources provided to enhance your user experience and see the complete line of PIVOT products.

Learn more at:
PIVOTCASE.COM

PIVOT SUPPORT
If you have questions please contact PIVOT Support.

www.pivotcase.com/support

sales@pivotcase.com

1-888-4-FLYBOYS (1-888-435-9269)

www.youtube.com/c/pivotcasevideo

TM and © 2017 FlyBoys Inc. All rights reserved.
Designed in USA. Printed in USA.

PIVOT™

Better Connection. Better Protection.
*Making the **Case** for Aviation.*